PIECES DETACHEES

Tracteur

TM3160

TM3160F-ME4,
MRE4
RE4

Yvan Béal 21, Av. de l'agriculture - B.P 16
Z.I. du Brézet 63014 Clermont-Ferrand Cedex 2
Tél : 04 73 91 93 51 Télécopie : 04 73 90 23 11
www.yvanbeal.fr Email : info@yvanbeal.fr
R.C.S 304 973 886 - SIREN 304 973 886

1736-097-1000-0

03-000149-050215

Directions for use of Parts Catalogue

1. Applicable model of machines

All component and option parts used for TM3160 tractors are listed in this parts catalogue.

1) MODEL TYPE

F····· FOUR WHEEL DRIVE

M····· MID PTO.

R····· FRONT/REAR HITCH & ROPS

2) AREA CODE

E4····· EUROPE

2. Explanation for head paragraph

KEY	PART CODE	DESCRIPTION	SPC	TYPE OF MODEL						ITC	COL	GRP	REMARKS
				SSM48M	SSM48F	SSM48G	SRM48M	SRM48F	SRM48G				
1	8595-211-001-20	CASE/UPPER	*	1 -229									
1A	8657-201-081-00	CASE/UPPER	*	1 230-			1						
2	8595-211-002-10	CASE/LOWER	*	1			1						
3	V523-100-801-80	PIN	*	2			2						
4	V211-260-803-00	BOLT, SEMS	*	6			6						
			*	2 -229									
			*	2 230-			3						
				2			2						
				1			1						

① ② ③ ④ ⑤ ⑥ ⑦ ⑧ ⑨

① KEY shows the location of parts diagramed in the illustration.

② Parts numbers begin with `V´ and `W´ are standard parts of the market.

③ `LH´ and `RH´ on the parts name are described against the moving direction of the machine or are described on the condition how to install parts on the machines.

④ SPC : The following symbol classifies parts to be used for machines.

`*´ means standard parts.

`T´ shows that the parts can be installed as optional parts.

`R´ shows that the parts can be used as applicable parts to replace originally equipped parts.

⑤ Upper column : QTY shows the number of parts to be used for one unit of machine.

`M´ is indicated for parts supplied by a meter long.

`ℓ´ is indicated for parts supplied by liter.

`AR´ is indicated for parts need to be adjusted or regulated.

Lower column : serial number

—229 means serial number up to 229.

230— means serial number 230 and after.

⑥ ITC : Interchangeability

`1´…OLD ← NEW

New parts can be used in place of the old parts.

`2´…OLD → NEW

Old parts can be used in place of the new parts.

`3´…OLD →← NEW

Old parts and new parts can not be replaced each other.

⑦ COL : Color code

Color is signified with color code number for colored parts.

Please see the color list shown in the next page.

⑧ GRP : Parts shown in this column can be replaced by SET parts.

Example : Parts marked Ⓐ can be replaced by parts marked Ⓑ, and Ⓓ for Ⓒ, so the rest follow in the same alphabetical order.

⑨ Remarks

＊ Other maker's part code number is shown in this column.

＊ When Fig. No. is shown in the Remark column of SET parts or ASSY parts, each of their component parts are listed in said Fig. No.

3. Color :

The following colors are used color parts.

COLOR CODE	COLOR	SPRAY TYPE CODE NUMBER	PAINTS 4K DRUM	PAINTS 16K DRUM
4 L	NEO BLUE	1300-985-001-10	1300-985-003-00	————
5 I	SUNSET GRAY	1300-959-001-10	1300-959-003-00	1300-959-004-00
7 F	MIRROR BLACK	1300-954-001-10	1300-954-003-00	1300-954-004-00

NOTE : Color code is signified only for the parts assigned by the maker as color parts.

4. Serial Numbers :

1) For engines serial number is stamped on CYLINDER BLOCK ASSY.
   Please see Fig. No. 5－1.
2) For chassies serial number is shown on the LABEL.
   Please see

5. Parts Order

1) Parts numbers listed in the parts catalogue are all registered in “ISEKI on-line computer”.
2) When you order parts, please make sure of correct numbers.
3) When substitute parts is available, the part number ordered will be automatically turned to a new part number.
4) Please be sure to use “ISEKI GENUINE PARTS”.
   Any other similar parts other than ISEKI parts when used may cause a trouble that makes us unable to repair or guarantee the warrant.

*** Structure Table of Model ***

MODEL / FIG.	TM3160	FFMEE4	FRE4									
1	*	*	*									
2	*	*	*									
3	*	*	*									
4	*	*	*									
5	*	*	*									
6	*	*	*									
7	*	*	*									
8	*	*	*									
9	*	*	*									
10	*	*	*									
11	*	*	*									
12	*	*	*									
13	*	*	*									
14	*	*	*									
15	*	*	*									
16	*	*	*									
17	*	*	*									
18	*	*	*									
19	*	*	*									
20	*	*	*									
21	*	*	*									
22	*	*	*									
23	*	*	*									
24	*	*	*									
25	*	*	*									
26	*	*	*									
27	*	*	*									
28	*	*	*									
29	*	*	*									
30	*	*	*									
31	*	*	*									
32	*	*	*									
33		*	*									
34	*	*	*									
35	*	*	*									
36	*	*	*									
37	*	*	*									
38	*	*	*									
39	*	*	*									
40	*	*	*									
41	*	*	*									
42	*	*	*									
43	*	*	*									
44	*	*	*									
45		*	*									

*** Structure Table of Model ***

MODEL FIG.	TM3160	FFMRE4										
46	*	*	*									
47	*	*	*									
48	*	*	*									
49	*	*	*									
50	*	*	*									
51	*	*	*									
52	*	*	*									
53	*	*	*									
54	*	*	*									
55	*	*	*									
56	*	*	*									
57		*	*									
58	*	*	*									
59	*	*	*									
60	*	*	*									
61	*	*	*									
62			T									
63	T	T	T									
64	T	T	T									
65	T											
66	T	T	T									
67	T	T	T									
68	T											
69	T											
70	T	T	T									
71	*	*	*									
72	*	*	*									

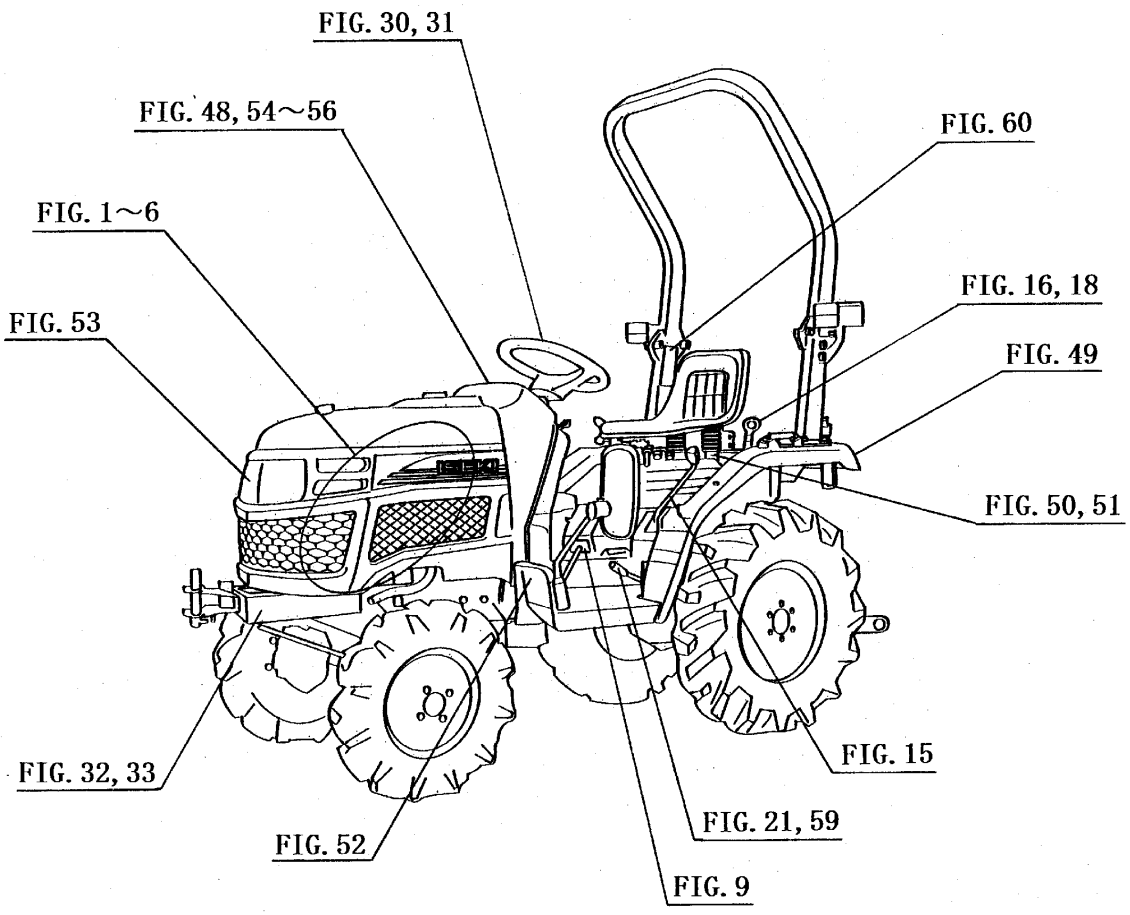
FIG. 30, 31
FIG. 48, 54～56
FIG. 60
FIG. 1～6
FIG. 16, 18
FIG. 53
FIG. 49
FIG. 50, 51
FIG. 15
FIG. 32, 33
FIG. 21, 59
FIG. 52
FIG. 9

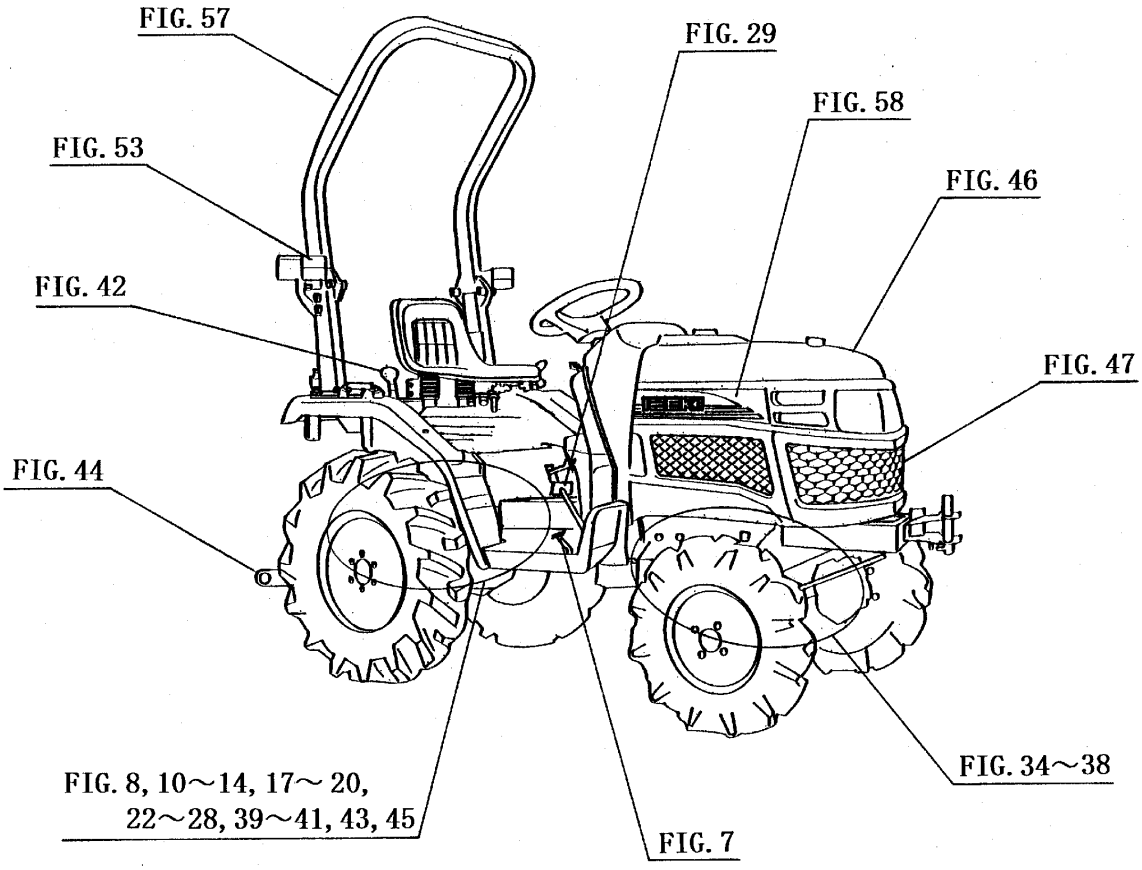
FIG. 57
FIG. 29
FIG. 58
FIG. 53
FIG. 46
FIG. 42
FIG. 47
FIG. 44
FIG. 34～38
FIG. 8, 10～14, 17～20,
22～28, 39～41, 43, 45
FIG. 7

Contents

TM3160

ENGINE(E393B06)

CYLINDER HEAD····· Fig. 1
CYLINDER HEAD COVER····· Fig. 2
INLET MANIFOLD····· Fig. 3
EXHAUST MANIFOLD····· Fig. 4
CYLINDER BLOCK····· Fig. 5
BEARING/UNDER SIZE (OPTION)····· Fig. 6
OIL PAN····· Fig. 7
REAR PLATE····· Fig. 8
TIMING GEAR CASE····· Fig. 9
HANGER····· Fig. 10
VALVE····· Fig. 11
CAM SHAFT····· Fig. 12
PISTON····· Fig. 13
PISTON/OVER SIZE (OPTION)····· Fig. 14
CRANK SHAFT····· Fig. 15
OIL PUMP····· Fig. 16
WATER PUMP····· Fig. 17
COOLING FAN····· Fig. 18
INJECTION NOZZLE····· Fig. 19
INJECTION PUMP····· Fig. 20
FUEL PIPE····· Fig. 21
ADAPTER····· Fig. 22
ELECTRIC (1)····· Fig. 23
ELECTRIC (2)····· Fig. 24

REPAIR PARTS (OPTION)····· Fig. 25
COMPONENT PARTS
FOR 6215-300-037-00 ON Fig.19····· Fig. 26
COMPONENT PARTS
FOR 6215-600-109-30 ON Fig.20····· Fig. 27
COMPONENT PARTS
FOR 6281-100-014-00 ON Fig.23····· Fig. 28
COMPONENT PARTS
FOR 6281-200-007-00 ON Fig.23····· Fig. 29

Contents

CHASSIS

RADIATOR SYSTEM····· Fig. 1
MUFFLER SYSTEM····· Fig. 2
AIR CLEANER SYSTEM····· Fig. 3
FILTER SYSTEM····· Fig. 4
FUEL TANK SYSTEM····· Fig. 5
BATTERY SYSTEM····· Fig. 6
ACCELERATOR SYSTEM····· Fig. 7
MAIN CLUTCH,INPUT SHAFT SYSTEM····· Fig. 8
PEDAL (CLUTCH) SYSTEM····· Fig. 9
CASE (TRANSMISSION) SYSTEM····· Fig. 10
GEAR (INPUT) SYSTEM····· Fig. 11
PINION (DRIVE) SYSYTEM····· Fig. 12
GEAR (REVERSE) SYSTEM····· Fig. 13
GEAR (4WD) SYSTEM····· Fig. 14
LEVER (MAIN) SYSTEM····· Fig. 15
LEVER (SUB) SYSTEM····· Fig. 16
CHANGE (4WD) SYSTEM····· Fig. 17
CHANGE (MAIN/SUB) SYSTEM····· Fig. 18
GEAR (PTO) SYSTEM····· Fig. 19
SHAFT (PTO) SYSTEM····· Fig. 20
LEVER (PTO) SYSTEM····· Fig. 21
SHIELD COVER SYSTEM····· Fig. 22
MID PTO SYSTEM(1/2)(2/2)····· Fig. 23
DIFF CASE SYSTEM····· Fig. 24
REAR AXLE HOUSING SYSTEM····· Fig. 25
SHAFT (WHEEL) SYSTEM····· Fig. 26
PEDAL (DIFF-LOCK) SYSTEM····· Fig. 27

BRAKE SYSTEM····· Fig. 28
PEDAL (BRAKE) SYSTEM(1/2)(2/2)····· Fig. 29
STEERING WHEEL SYSTEM·····Fig. 30
STEERING (MANUAL) SYSTEM····· Fig. 31
BRACKET (AXLE) SYSTEM·····Fig. 32
HITCH (FRONT) SYSTEM (R TYPE)····· Fig. 33
SHAFT (DRIVE) SYSTEM····· Fig. 34
BEVEL CASE SYSTEM····· Fig. 35
AXLE HOUSING SYSTEM····· Fig. 36
FINAL GEAR CASE SYSTEM·····Fig. 37
TIE ROD SYSTEM·····Fig. 38
CASE (CYLINDER) SYSTEM·····Fig. 39
LIFT ARM SYSTEM····· Fig. 40
CYLINDER SYSTEM····· Fig. 41
CONTROL SYSTEM·····Fig. 42
PIPING SYSTEM·····Fig. 43
LINK (3P) SYSTEM·····Fig. 44
HITCH (DRAW BAR) SYSTEM (R TYPE)····· Fig. 45
HOOD SYSTEM(1/2)(2/2)····· Fig. 46
GRILLE SYSTEM····· Fig. 47
STEERING COVER SYSTEM····· Fig. 48
FENDER SYSTEM····· Fig. 49
SEAT BASE SYSTEM····· Fig. 50
FRAME SYSTEM·····Fig. 51
STEP SYSTEM·····Fig. 52
LAMP SYSTEM·····Fig. 53
PANEL SYSTEM····· Fig. 54
SWITCH SYSTEM····· Fig. 55
HARNESS SYSTEM····· Fig. 56
ROPS SYSTEM (R TYPE)····· Fig. 57
ORNAMENT,LABEL·····Fig. 58
LABEL (CONTROL)····· Fig. 59
LABEL (CAUTION)····· Fig. 60

TOOLS····· Fig. 61

OPTIONAL PARTS

MID PTO SET (EXCEPT M TYPE)
(OPTION)(1/2)(2/2)····· Fig. 62
REAR WHEEL (TURF) SYSTEM (OPTION)····· Fig. 63
REAR WHEEL SYSTEM (OPTION)····· Fig. 64
HITCH (FRONT) SET (EXCEPT R TYPE)
(OPTION)····· Fig. 65
FRONT WHEEL SYSTEM (OPTION)····· Fig. 66
FRONT WHEEL (TURF) SYSTEM (OPTION)····· Fig. 67
HITCH (DRAW BAR) SET (EXCEPT R TYPE)
(OPTION)····· Fig. 68
ROPS SET (EXCEPT R TYPE) (OPTION)····· Fig. 69
WEIGHT (BUMPER) SYSTEM (OPTION)····· Fig. 70

COMPONENT PARTS

COMPONENT PARTS
FOR K211-001-000-00 ON Fig.41····· Fig. 71
COMPONENT PARTS
FOR 1682-406-210-10 ON Fig.31····· Fig. 72

WIRING DIAGRAM (1)
WIRING DIAGRAM (2)

E N G I N E

E393B06···TM3160

6003-097-240-00

FIG. 1 CYLINDER HEAD

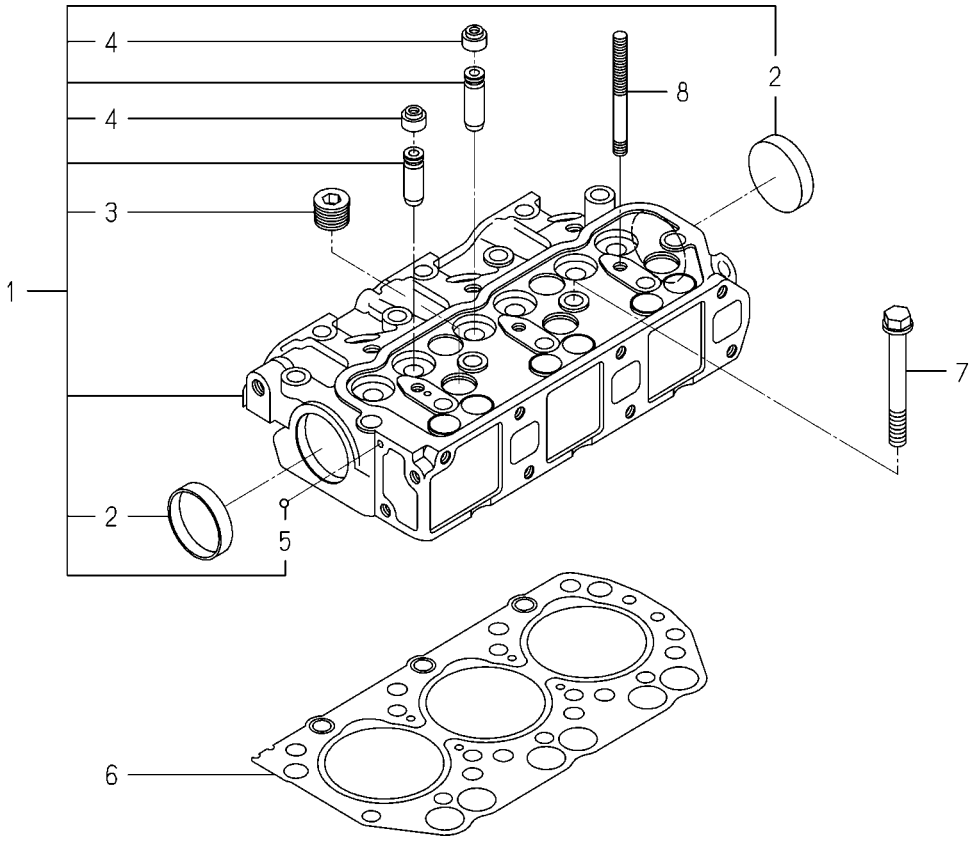

6003-101E-0100,6003-101E-0200

KEY	PART CODE	DESCRIPTION	SPC	TYPE OF MODEL E393B06		ITC	COL	GRP	REMARKS
1	6211-110-065-20	CYLINDERHEAD ASSY	*	1					
2	6911-129-006-00	CAP,SEALING	*	2					
3	6209-605-004-10	PLUG/PT1/2	*	5					
4	6212-569-002-00	SEAL,OIL	*	6					
5	V682-200-000-60	BALL	*	1					
6	6211-141-008-30	GASKET/CYLINDERHEAD	*	1					
7	6209-000-003-00	BOLT/M10X1.25X82	*	14					
8	6209-300-014-00	STUD	*	2					

FIG. 2 CYLINDER HEAD COVER

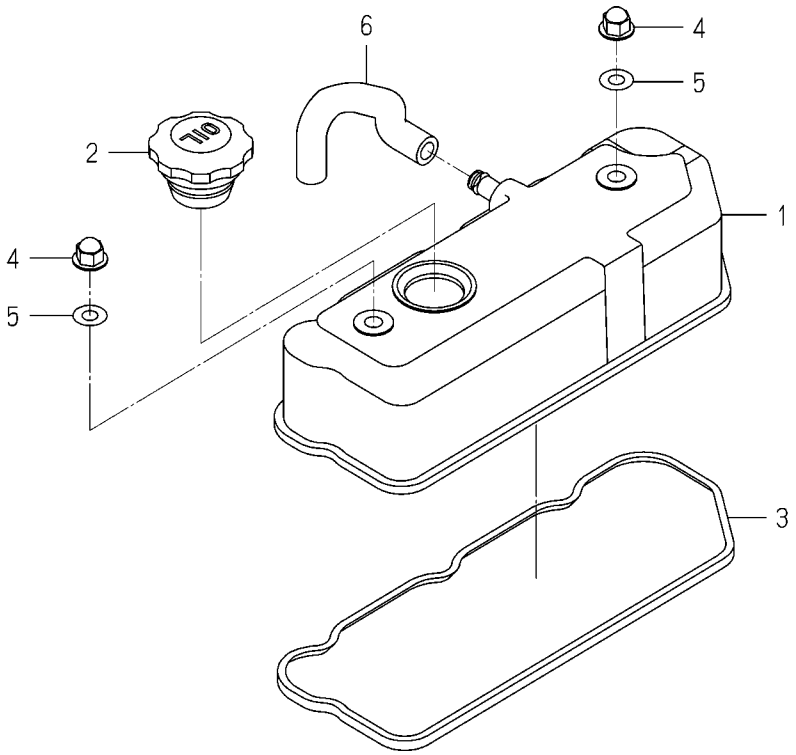

6003-110 -0100

KEY	PART CODE	DESCRIPTION	SPC	TYPE OF MODEL E393B06		ITC	COL	GRP	REMARKS
1	6211-170-004-20	COVER/CYLINDER HEAD	*	1					
2	6211-751-001-10	CAP,OIL FILLER	*	1					
3	6211-173-003-00	SEAL,CYL.HEAD COVER	*	1					
4	6209-490-002-10	NUT/CAP	*	2					
5	6209-572-003-00	GASKET	*	2					
6	6209-360-028-10	HOSE/RABBER	*	1					

FIG. 3 INLET MANIFOLD

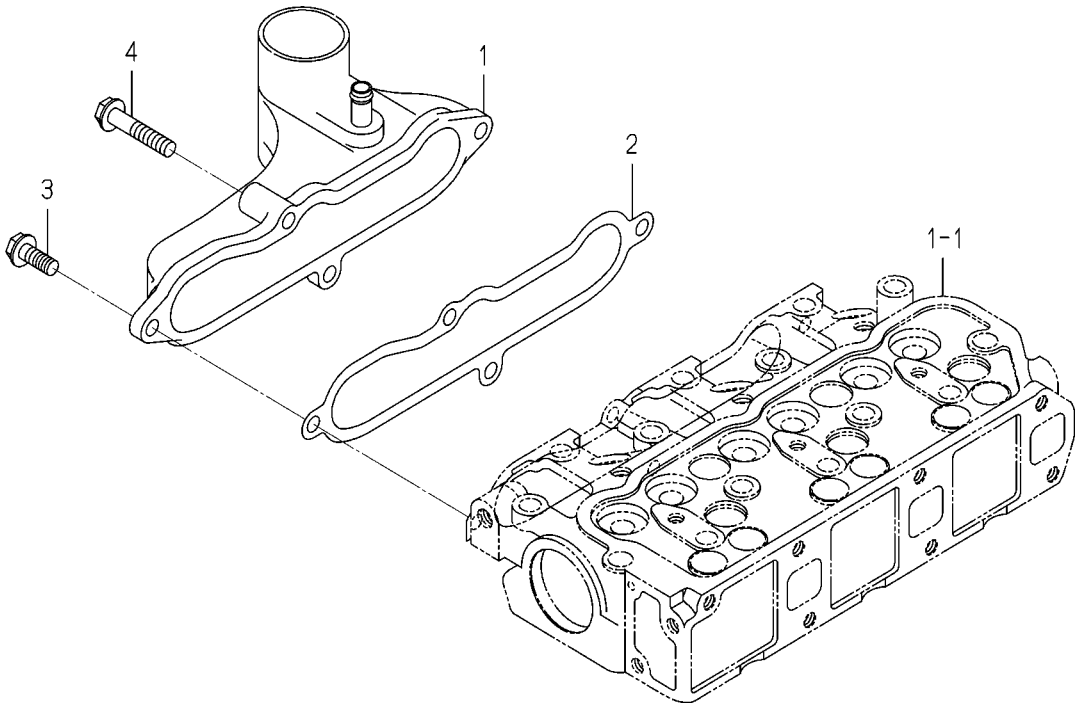

6003-120B-0100

KEY	PART CODE	DESCRIPTION	SPC	TYPE OF MODEL		ITC	COL	GRP	REMARKS
				E393B06					
1	6214-111-011-20	MANIFOLD(INLET) ASSY	*	1					
2	6214-115-001-20	GASKET,INLET MANIFOL	*	1					
3	V231-360-802-00	FLANGEBOLT	*	3					
4	V231-360-804-00	FLANGEBOLT	*	1					

FIG. 4 EXHAUST MANIFOLD

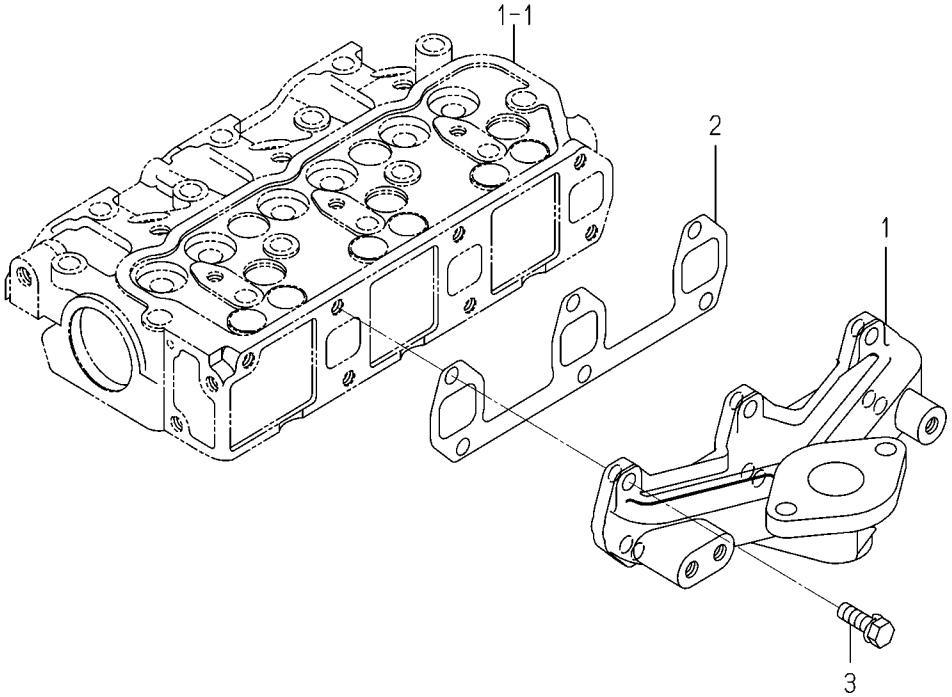

6004-140 -0100

KEY	PART CODE	DESCRIPTION	SPC	TYPE OF MODEL E393B06		ITC	COL	GRP	REMARKS
1	6214-141-010-10	MANIFOLD,EXH	*	1					
2	6214-145-001-30	GASKET,EXH.MANIFOLD	*	1					
3	V211-560-802-50	BOLT,SEMS/M8X25 7T	*	6					

FIG. 5 CYLINDER BLOCK

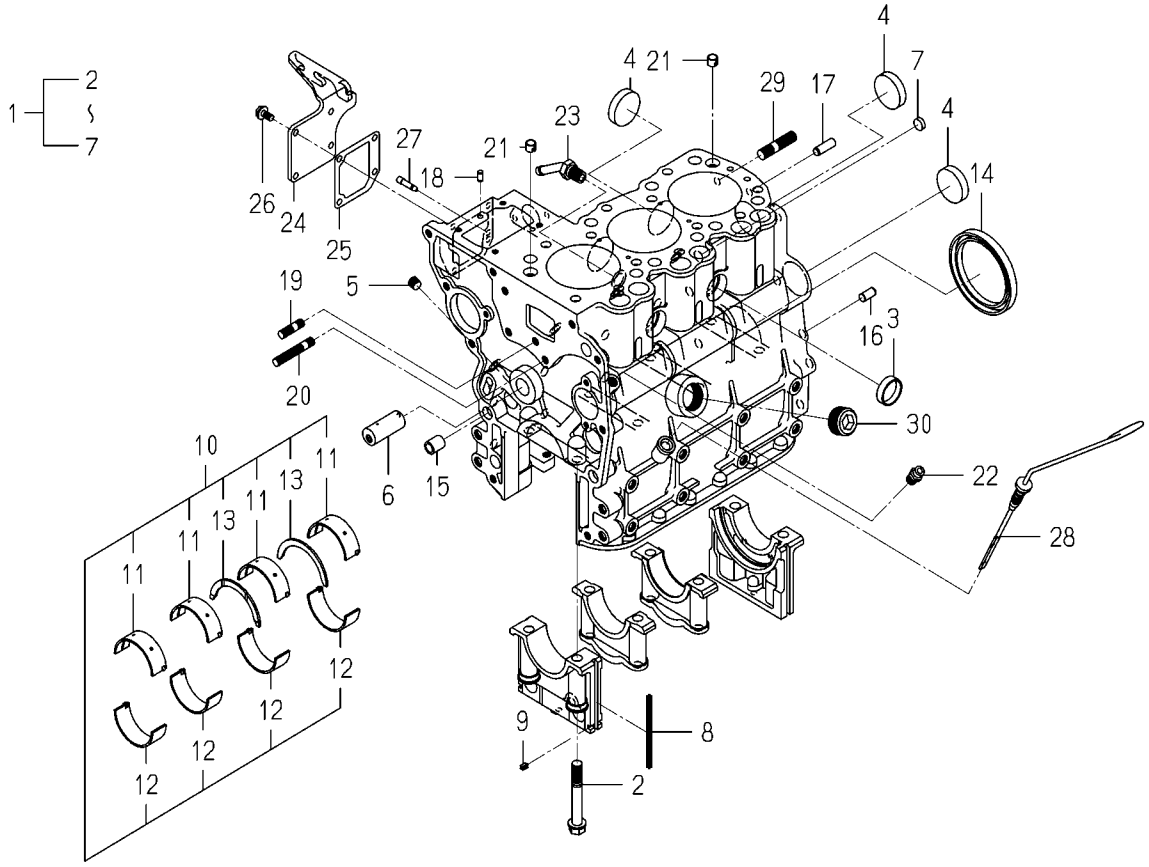

6003-201Y-0100

KEY	PART CODE	DESCRIPTION	SPC	TYPE OF MODEL E393B06		ITC	COL	GRP	REMARKS
1	6211-210-050-20	CYLINDERBLOCK ASSY	*	1					
2	6209-000-004-10	BOLT	*	8					
3	6209-610-001-10	CUP/SEALING/28	*	2					
4	6209-610-009-00	CUP/SEALING/36	*	4					
5	6509-605-019-10	PLUG	*	3					
6	6212-531-005-10	PIN/IDLEGEAR	*	1					
7	6209-610-008-00	CUP/SEALING/12	*	1					
8	6211-258-001-00	SEAL,BEARING CAP	*	4					
9	6211-258-002-00	SEAL,BEARING CAP/7	*	2					
10	6211-510-001-00	METAL,CRANK SET	*	1					
11	6211-511-003-00	BEARING/CRANK/UPPER	*	4					
12	6211-511-004-00	BEARING/CRANK/LOWER	*	4					
13	6211-599-001-10	BEARING,THRUST CRANK	*	2					
14	6209-625-012-00	OILSEAL	*	1					
15	6209-749-001-20	PIN/TUBE	*	2					
16	6213-129-006-00	PIN/STRAIGHT	*	1					
17	V523-100-802-40	PIN	*	1					
18	6213-129-005-00	PIN/STRAIGHT	*	2					
19	6904-110-818-00	STUD	*	1					
20	6904-110-840-00	STUD/M8X40	*	1					
21	6294-453-002-00	DOWEL	*	2					
22	6909-902-299-00	NIPPLE	*	1					
23	6213-721-007-00	PIPE/WATERDRAIN	*	1					
24	6211-291-016-00	COVER/INJECTIONPUMP	*	1					
25	6211-292-001-20	GASKET/COVER	*	1					
26	V230-360-601-20	FLANGEBOLT	*	4					
27	6215-549-001-10	PIN,STARTING SPRING	*	1					
28	6211-760-012-20	LEVELGAGE	*	1					
29	6209-300-013-00	STUD	*	2					
30	6209-605-005-10	PLUG/PT3/4	*	1					

FIG. 6 BEARING/UNDER SIZE (OPTION)

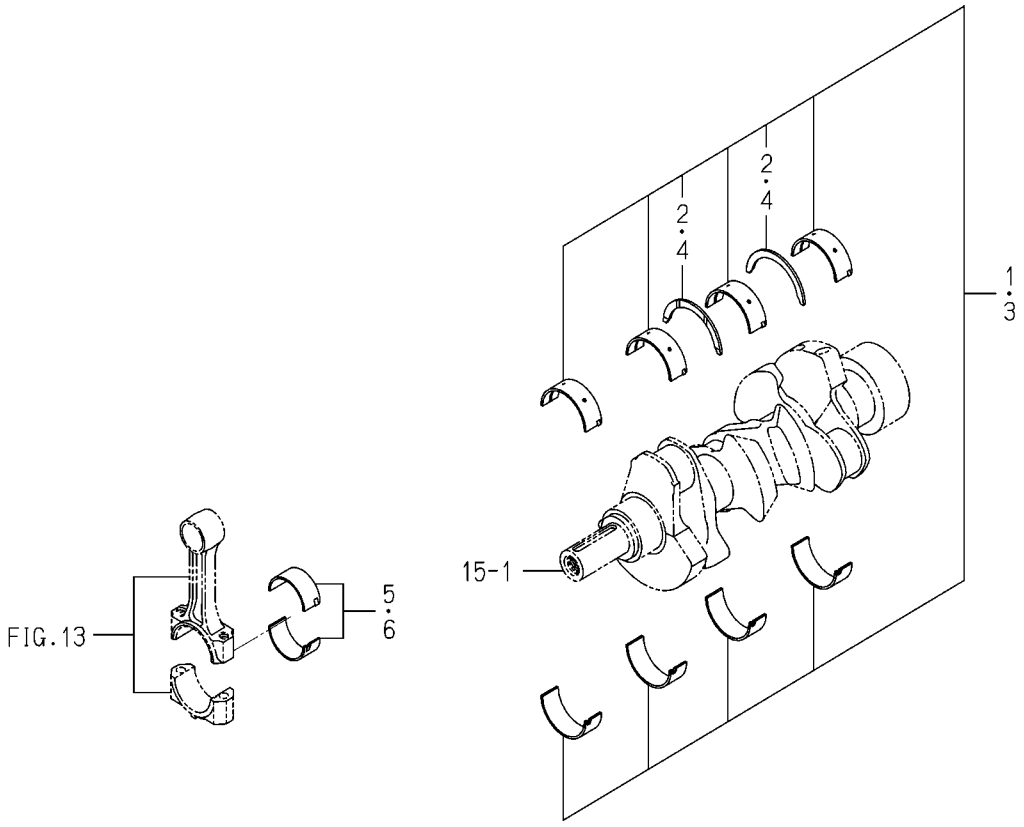

6003-209 -0100

KEY	PART CODE	DESCRIPTION	SPC	TYPE OF MODEL E393B06		ITC	COL	GRP	REMARKS
1	6211-540-001-00	METAL,CRANK SET	T	1					
2	6211-599-001-10	BEARING,THRUST CRANK	T	2					
3	6211-560-001-00	METAL,CRANK SET	T	1					
4	6211-599-001-10	BEARING,THRUST CRANK	T	2					
5	6212-274-006-00	BEARING/CONNECTING R	T	3					
6	6212-276-006-00	BEARING/CONNECTING R	T	3					

FIG. 7 OIL PAN

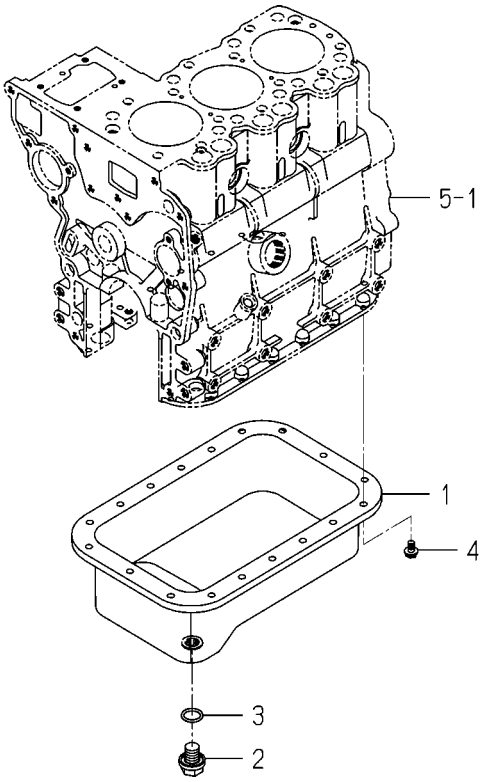

6004-210F-0100

KEY	PART CODE	DESCRIPTION	SPC	TYPE OF MODEL		ITC	COL	GRP	REMARKS
				E393B06					
1	6211-361-069-00	OILPAN COMP	*	1					
2	6209-600-006-00	PLUG/M14X1.5	*	1					
3	V720-102-401-80	O-RING/P18	*	1					
4	V230-360-601-00	FLANGEBOLT	*	18					

FIG. 8 REAR PLATE

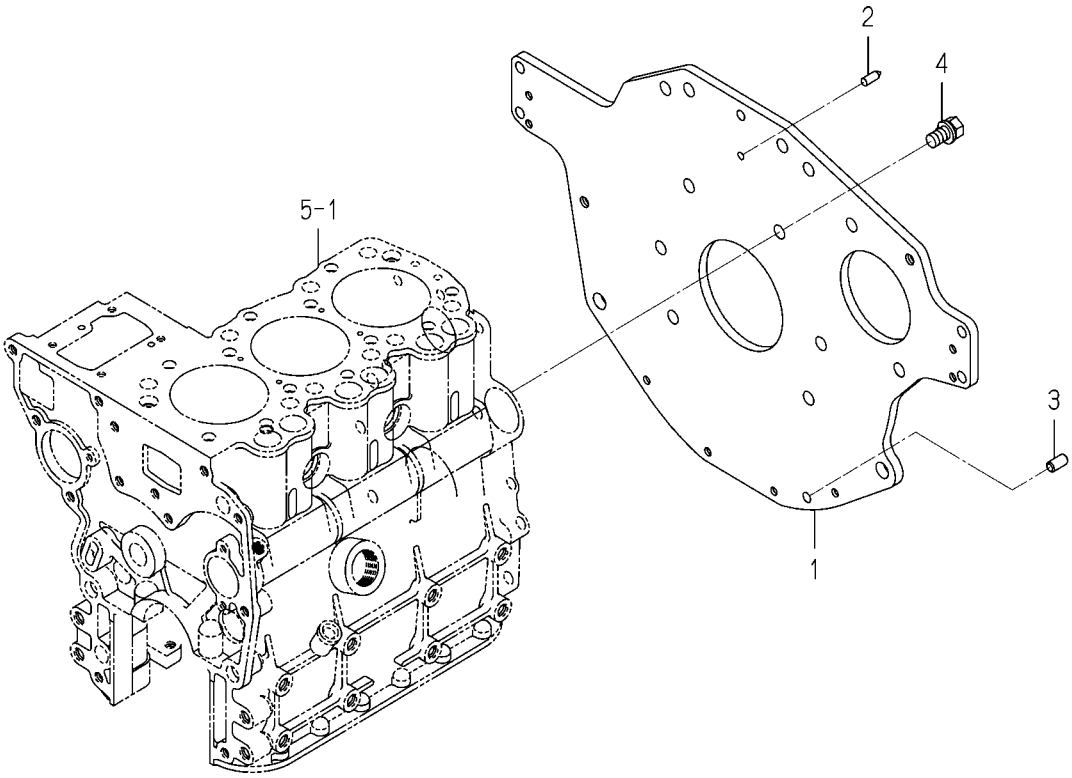

6004-220H-0100

KEY	PART CODE	DESCRIPTION	SPC	TYPE OF MODEL E393B06		ITC	COL	GRP	REMARKS
1	6211-341-053-20	PLATE/REAR	*	1					
2	6211-342-002-10	POINTER	*	1					
3	6213-129-006-00	PIN/STRAIGHT	*	1					
4	6901-911-020-00	BOLT,SEMS/M10X20	*	6					

FIG. 9 TIMING GEAR CASE

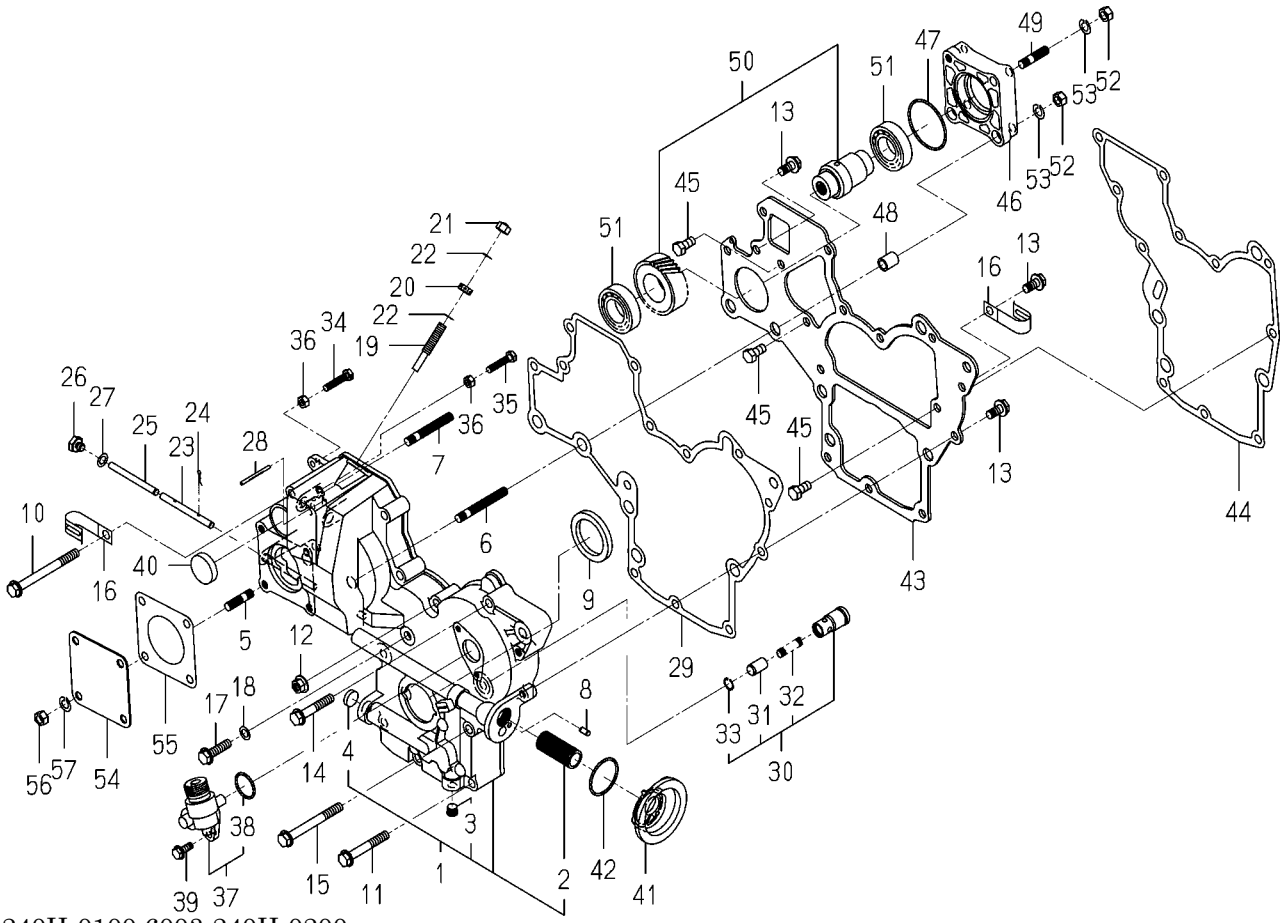

6003-240H-0100,6003-240H-0200

KEY	PART CODE	DESCRIPTION	SPC	TYPE OF MODEL E393B06		ITC	COL	GRP	REMARKS
1	6211-310-017-30	GEARCASE ASSY	*	1					
2	6213-319-004-00	CONNECTOR/OILFILTER	*	1					
3	6509-605-019-10	PLUG	*	1					
4	6209-610-002-10	CUP/SEALING/16	*	1					
5	6904-110-822-00	STUD	*	4					
6	6904-110-855-00	STUD	*	2					
7	6904-110-850-00	STUD	*	1					
8	6213-129-005-00	PIN/STRAIGHT	*	1					
9	6209-625-002-00	SEAL,OIL	*	1					
10	V231-360-808-50	FLANGEBOLT	*	1					
11	V231-360-805-50	FLANGEBOLT	*	2					
12	3817-401-001-00	NUT/M08	*	1					
13	V231-360-801-60	FLANGEBOLT	*	3					
14	V231-360-804-50	FLANGEBOLT	*	5					
15	V231-360-807-50	FLANGEBOLT	*	1					
16	1425-621-004-00	HOLDER/JE/9-9	*	2					
17	V231-360-803-00	FLANGEBOLT	*	1					
18	6209-500-003-00	WASHER/08X14X01	*	1					
19	6215-546-003-10	STOPPER/FULLLOAD	*	1					
20	6209-409-001-00	NUT/M8	*	1					
21	V341-120-008-00	NUT,CAP/M 8	*	1					
22	6209-920-002-00	PACKING	*	2					
23	6215-542-004-20	PIN/ARM	*	1					
24	P117-303-003-00	PIN/SNAP	*	2					
25	6215-542-005-10	PIN	*	1					
26	6209-600-004-00	PLUG/SCREW	*	1					
27	6209-500-003-00	WASHER/08X14X01	*	1					
28	6209-740-001-00	PIN,GROOVE	*	1					
29	6211-312-003-20	GASKET/GEARCASE	*	1					
30	6213-160-002-20	VALVE/RELIEF ASSY	*	1					

FIG. 9 TIMING GEAR CASE

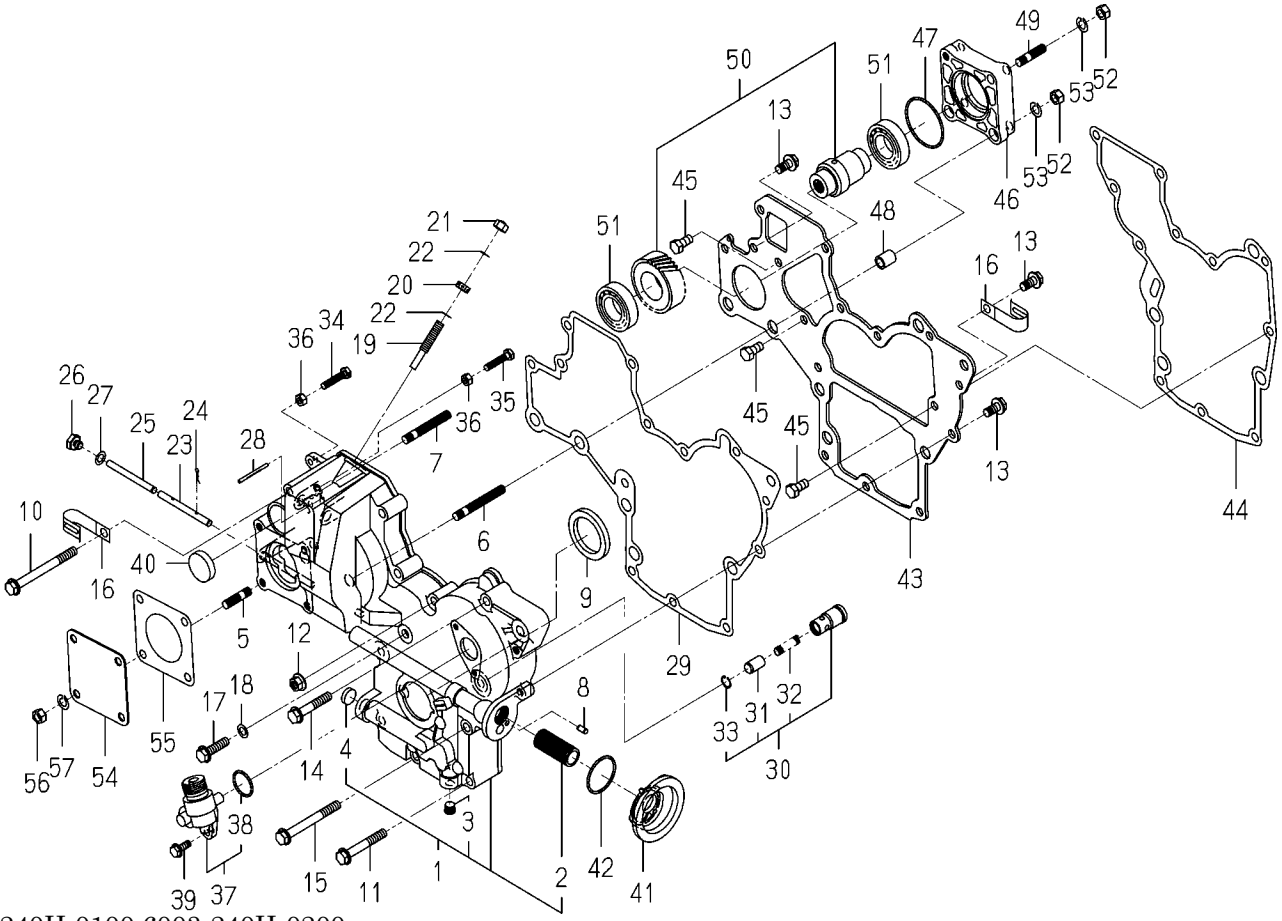

6003-240H-0100,6003-240H-0200

KEY	PART CODE	DESCRIPTION	SPC	TYPE OF MODEL E393B06		ITC	COL	GRP	REMARKS
31	6213-161-001-20	PISTON/VALVE/RELIEF	*	1					
32	6213-164-001-00	SPRING/RELIEF VALVE	*	1					
33	V705-140-012-00	RING,SNAP/12 C	*	1					
34	6209-050-001-00	BOLT/M6	*	1					
35	6209-050-002-00	BOLT/M6	*	1					
36	6909-110-406-00	NUT	*	2					
37	6219-310-003-20	DRIVE/TACHOMETE ASSY	*	1					
38	V723-102-002-40	RING/O	*	1					
39	V230-360-601-60	FLANGEBOLT	*	2					
40	3625-540-004-00	CAP,BLANK/30	*	1					
41	6213-211-001-10	SPACER,OIL FILTER	*	1					
42	V723-102-003-60	O-RING	*	1					
43	6211-311-011-20	PLATE/FRONT	*	1					
44	6211-312-002-30	GASKET/PLATE	*	1					
45	6902-050-816-00	BOLT	*	3					
46	6211-319-003-00	SPACER	*	1					
47	V723-102-005-00	O-RING 1A S50	*	1					
48	6209-749-001-20	PIN/TUBE	*	2					
49	6904-110-822-00	STUD	*	1					
50	6212-530-005-20	SHAFT/HYDRAULIC ASSY	*	1					
51	V600-110-600-50	BEARING,RB/6005	*	2					
52	6909-110-408-00	NUT/M8	*	4					
53	V401-160-008-00	WASHER,SP/M 8	*	4					
54	6511-321-083-00	COVER	*	1					
55	6211-322-002-00	GASKET/COVER	*	1					
56	6909-110-408-00	NUT/M8	*	4					
57	V401-160-008-00	WASHER,SP/M 8	*	4					

FIG. 10 HANGER

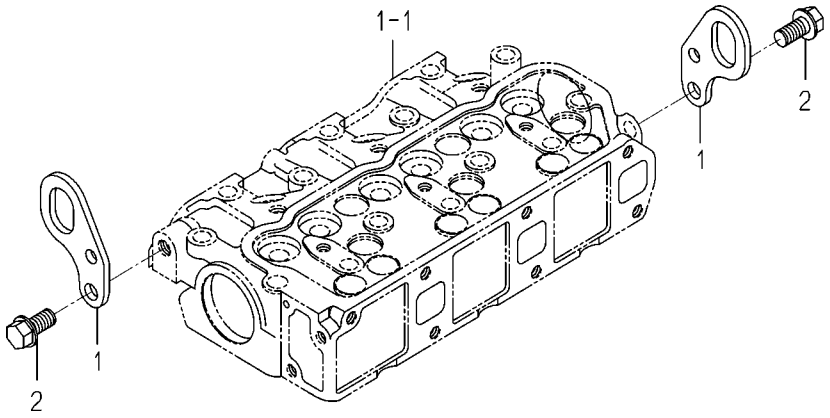

6003-290 -0100

KEY	PART CODE	DESCRIPTION	SPC	TYPE OF MODEL		ITC	COL	GRP	REMARKS
				E393B06					
1	6211-777-007-30	HANGER	*	2					
2	6209-046-044-00	BOLT/FLANGE	*	2					

FIG. 11 VALVE

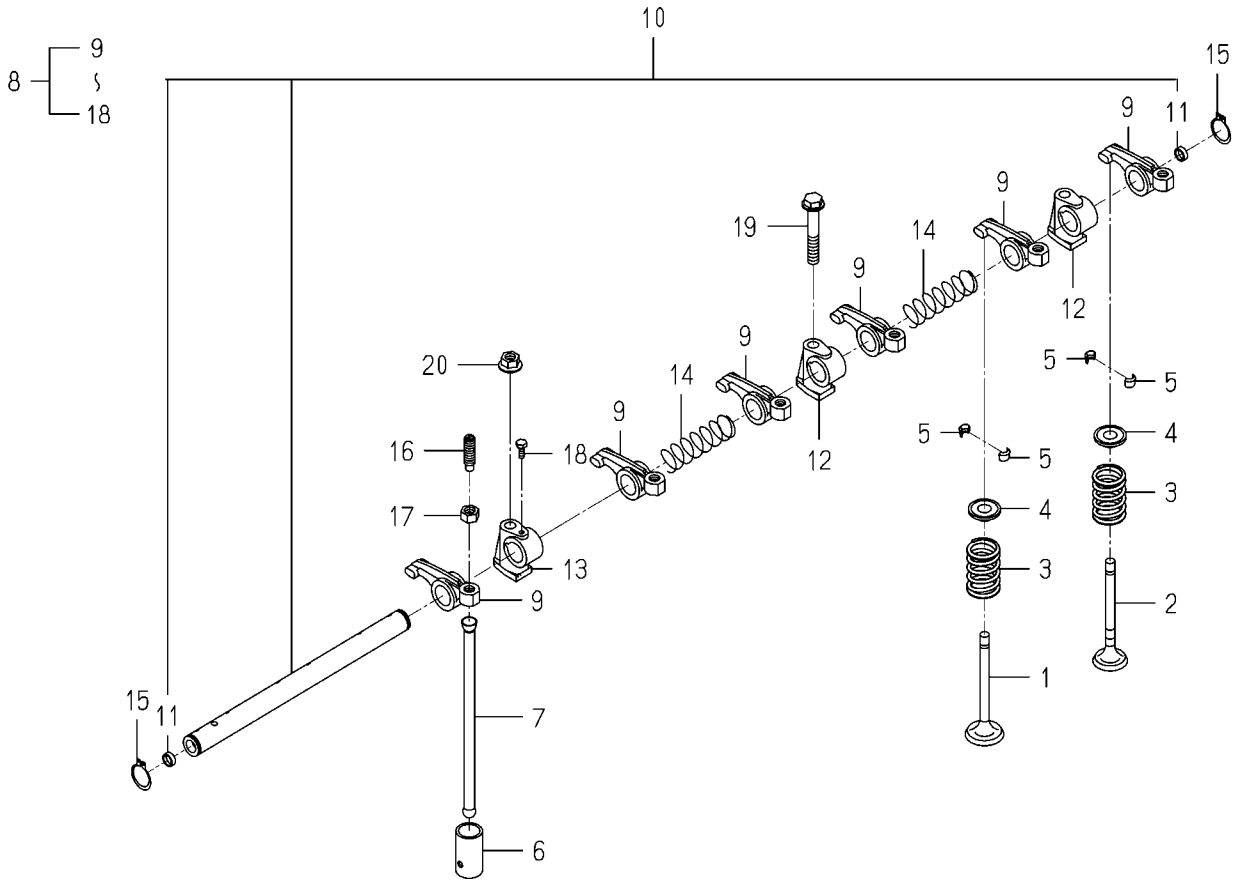

6003-301 -0100

KEY	PART CODE	DESCRIPTION	SPC	TYPE OF MODEL E393B06		ITC	COL	GRP	REMARKS
1	6212-551-001-10	VALVE/INTAKE	*	3					
2	6212-552-001-20	VALVE/EXHAUST	*	3					
3	6212-561-001-10	SPRING/VALVE	*	6					
4	6212-563-001-00	SEAT,VALVE SPRING	*	6					
5	6212-565-001-00	CUTTER,VALVE	*	12					
6	6212-571-006-00	TAPPET	*	6					
7	6212-575-001-00	ROD,PUSH	*	6					
8	6212-600-002-10	ROCKERSHAFT ASSY	*	1					
9	6212-611-004-10	ROCKERARM	*	6					
10	6212-620-001-20	SHAFT/ROCKERARM ASSY	*	1					
11	6212-626-002-10	PLUG	*	2					
12	6212-628-004-00	BRACKET ROCKER SHAFT	*	2					
13	6212-628-005-00	BRACKET,ROCKER SHAFT	*	1					
14	6209-940-004-00	SPRING	*	2					
15	V704-140-016-00	RING,SNAP/16 C	*	2					
16	6212-616-002-00	SCREW ADJUST	*	6					
17	6209-409-003-00	NUT	*	6					
18	6209-000-002-00	BOLT	*	1					
19	V231-360-805-00	FLANGEBOLT	*	1					
20	3817-401-001-00	NUT/M08	*	2					

FIG. 12 CAM SHAFT

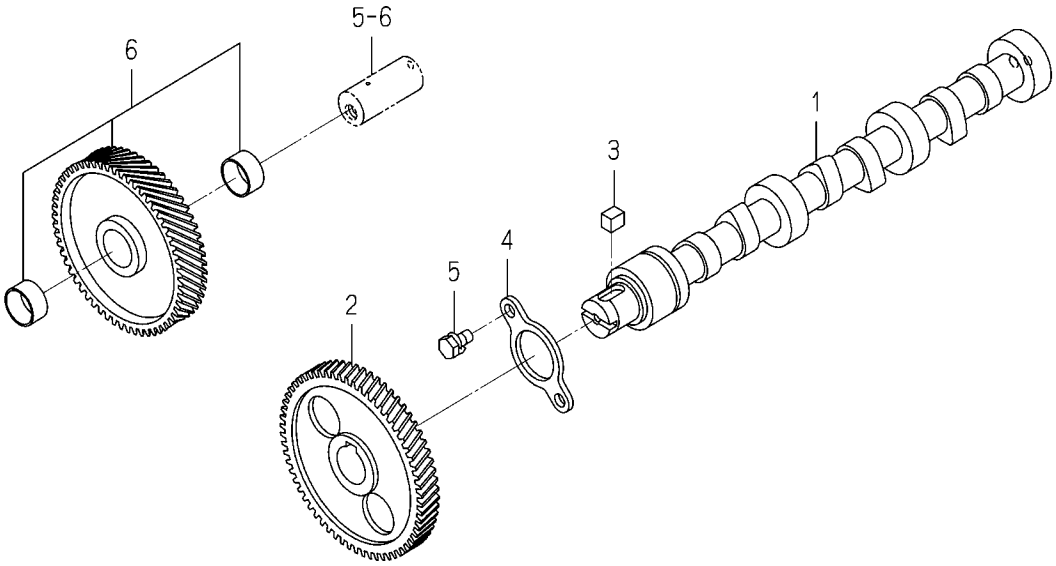

6003-310 -0100

KEY	PART CODE	DESCRIPTION	SPC	TYPE OF MODEL E393B06		ITC	COL	GRP	REMARKS
1	6212-511-002-00	SHAFT,CAM	*	1					
2	6212-522-010-00	GEAR/CAMSHAFT	*	1					
3	6209-730-005-00	KEY/07X05X09	*	1					
4	6212-535-001-00	PLATE,THRUST	*	1					
5	6901-910-612-00	BOLT,SEMS/M6X12	*	2					
6	6212-523-023-00	GEAR/IDLE ASSY	*	1					

FIG. 13 PISTON

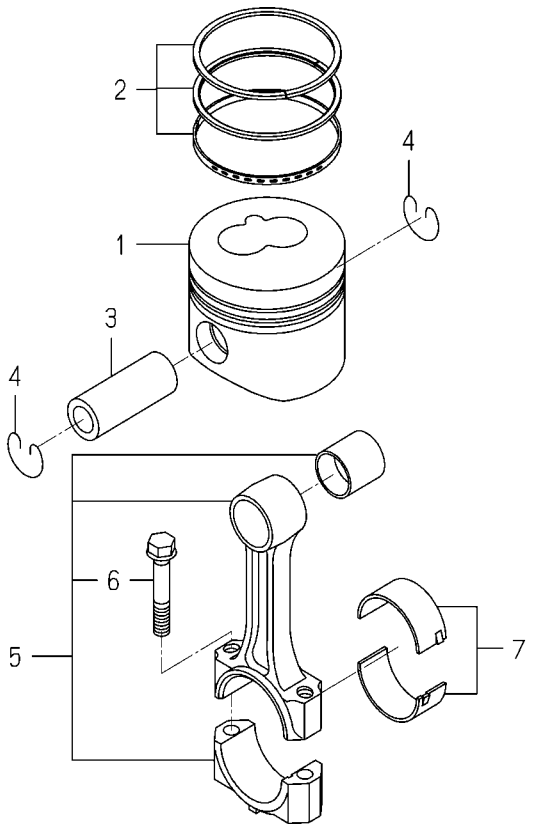

6003-340E-0100

KEY	PART CODE	DESCRIPTION	SPC	TYPE OF MODEL E393B06		ITC	COL	GRP	REMARKS
1	6212-111-015-10	PISTON	*	3					
2	6212-121-008-20	RING/PISTON SET	*	3					
3	6212-211-001-10	PIN,PISTON	*	3					
4	6209-587-001-00	RING,SNAP	*	6					
5	6212-230-003-10	CONNECTINGROD ASSY	*	3					
6	6212-235-005-00	BOLT/CONNECTINGROD	*	6					
7	6212-271-006-00	BEARING/CONNECTING R	*	3					

FIG. 14 PISTON/OVER SIZE (OPTION)

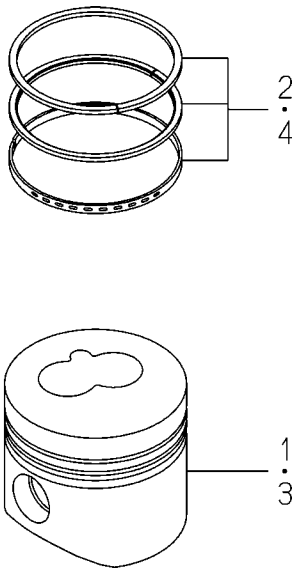

6003-349F-0100

KEY	PART CODE	DESCRIPTION	SPC	TYPE OF MODEL		ITC	COL	GRP	REMARKS
				E393B06					
1	6212-114-015-10	PISTON/OV	T	3					
2	6212-124-008-10	RING/PISTON/OV SET	T	3					
3	6212-116-015-10	PISTON/OV	T	3					
4	6212-126-008-10	RING/PISTON/OV SET	T	3					

FIG. 15 CRANK SHAFT

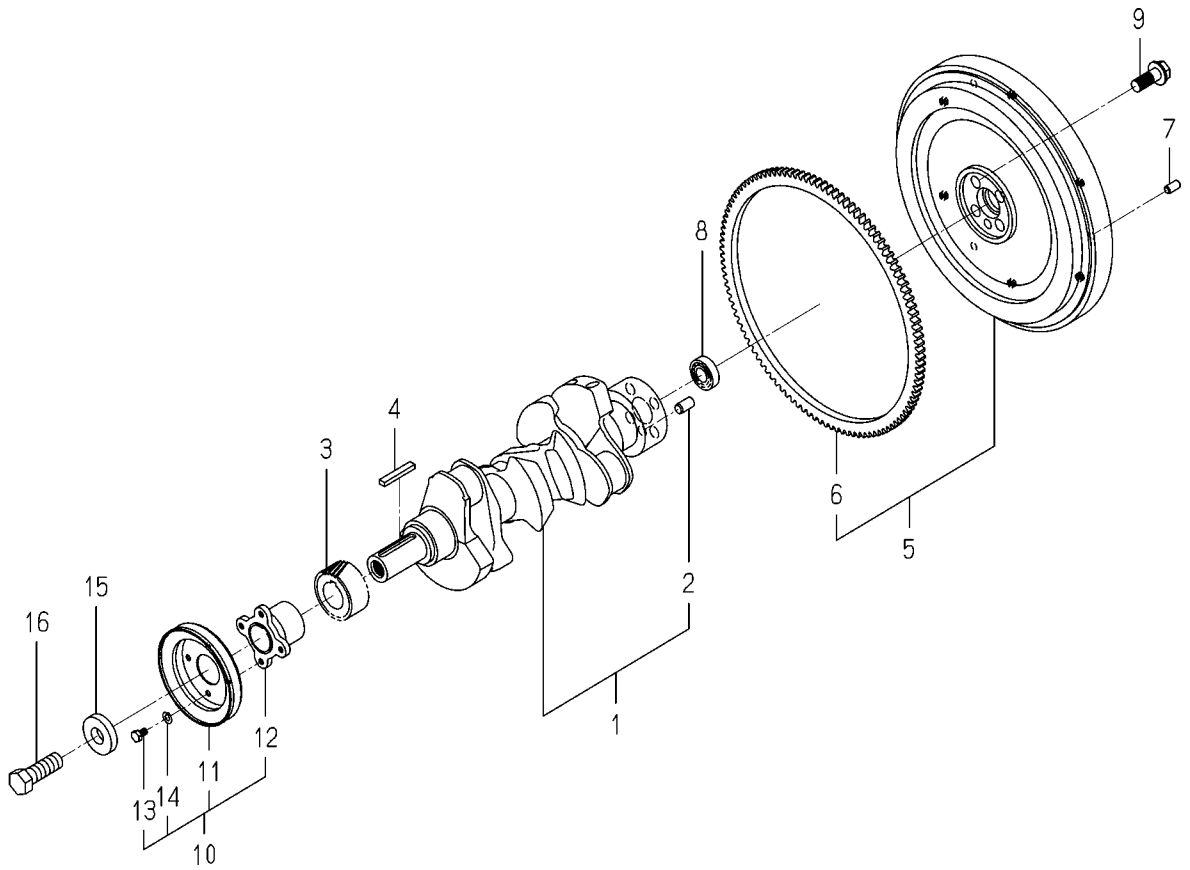

6003-350I-0100

KEY	PART CODE	DESCRIPTION	SPC	TYPE OF MODEL E393B06		ITC	COL	GRP	REMARKS
1	6212-310-008-40	CRANKSHAFT ASSY	*	1					
2	V523-101-001-80	PIN	*	1					
3	6212-521-008-00	GEAR/CRANK	*	1					
4	6209-730-006-00	KEY/07X05X43	*	1					
5	6212-330-017-30	FLYWHEEL ASSY	*	1					
6	6212-333-003-00	RINGGEAR	*	1					
7	6213-129-006-00	PIN/STRAIGHT	*	3					
8	V600-150-600-20	BEARING,RB/6002SS	*	1					
9	6209-046-015-00	BOLT/FLANGE	*	4					
10	6212-370-011-00	PULLEY ASSY	*	1					
11	6212-371-009-00	PULLEY	*	1					
12	6212-372-002-10	CENTER CRANK PULLEY	*	1					
13	6902-050-610-00	BOLT	*	4					
14	6909-150-506-00	WASHER,SP/M6	*	4					
15	6212-379-001-00	WASHER	*	1					
16	6901-066-645-00	BOLT	*	1					

FIG. 16 OIL PUMP

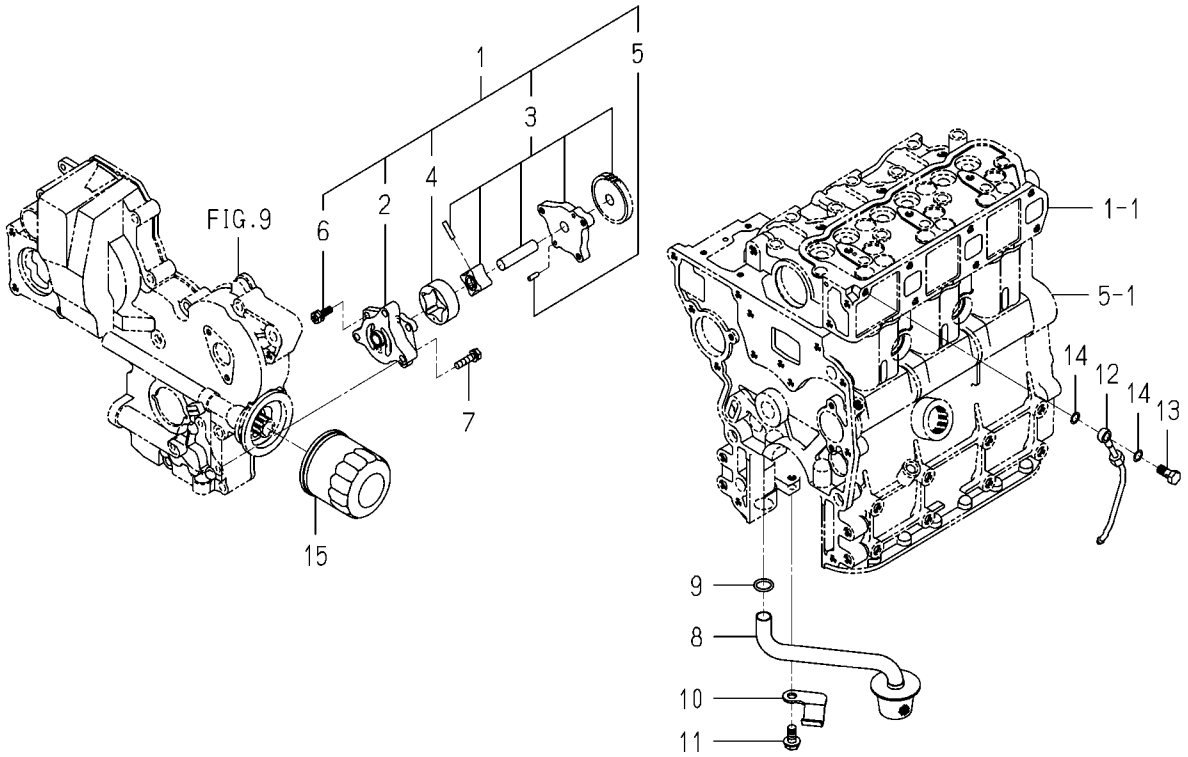

6003-401D-0100

KEY	PART CODE	DESCRIPTION	SPC	TYPE OF MODEL E393B06		ITC	COL	GRP	REMARKS
1	6213-100-003-30	OILPUMP ASSY	*	1					
2	6213-111-001-30	BODY/OILPUMP	*	1					
3	6213-120-003-20	GEAR/OILPUMP ASSY	*	1					
4	6213-125-001-00	ROTOR/OUTER	*	1					
5	6213-129-003-00	PIN/STRAIGHT	*	2					
6	6213-119-001-00	BOLT/WS	*	3					
7	6901-910-625-00	BOLT	*	3					
8	6213-140-023-00	STRAINER	*	1					
9	V720-102-401-50	O-RING/P15	*	1					
10	6213-149-002-00	CLAMP,STRAINER	*	1					
11	V231-360-801-60	FLANGEBOLT	*	1					
12	6213-311-003-10	PIPE,OIL	*	1					
13	6909-906-105-10	BOLT,JOINT	*	1					
14	6209-920-002-00	PACKING	*	2					
15	6213-240-002-10	CARTRIDGE/OILFILTER	*	1					

FIG. 17 WATER PUMP

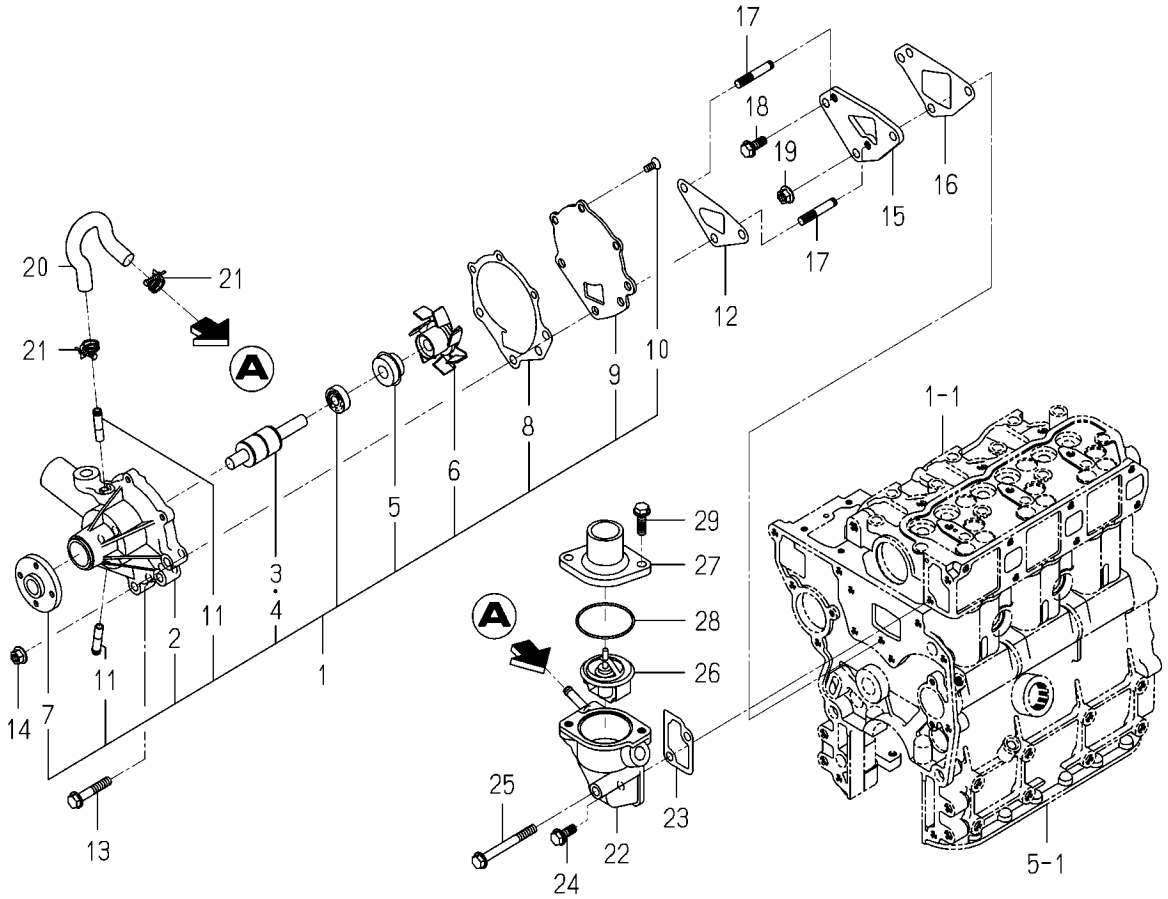

6003-420B-0100

KEY	PART CODE	DESCRIPTION	SPC	TYPE OF MODEL E393B06		ITC	COL	GRP	REMARKS
1	6213-610-005-40	WATERPUMP ASSY	*	1					
2	6213-611-003-20	BODY/WATERPUMP	*	1					
3	6213-631-002-00	BEARING/WATER PUMP	*	1					
4	6213-631-005-00	BEARING/WATERPUMP	*	1					
5	6213-622-002-10	SEAL SET/WATER PUMP	*	1					
6	6213-621-003-00	ROTOR/WATERPUMP	*	1					
7	6213-642-002-00	SEAL/WATER PUMPPULLE	*	1					
8	6213-613-002-10	GASKET	*	1					
9	6213-612-004-00	PLATE/WATER PUMP	*	1					
10	6213-619-003-00	SCREW/WATER PUMP	*	3					
11	6213-619-002-00	PIPE/WATER PUMP	*	2					
12	6213-614-003-10	GASKET/WATER PUMP	*	1					
13	V231-360-804-50	FLANGEBOLT	*	1					
14	3817-401-001-00	NUT/M08	*	2					
15	6213-619-005-00	SPACER,WATER PUMP	*	1					
16	6213-614-006-10	GASKET/SPACER	*	1					
17	6209-300-002-00	STUD	*	2					
18	V231-360-802-00	FLANGEBOLT	*	1					
19	3817-401-001-00	NUT/M08	*	1					
20	6213-729-013-10	HOSE/RUBBER	*	1					
21	J061-210-015-00	CLAMP/WIRE/10-15	*	2					
22	6213-716-001-50	HOUSING/THERMOSTAT	*	1					
23	6213-743-002-10	GASKET/HOUSING	*	1					
24	V231-360-802-00	FLANGEBOLT	*	1					
25	V231-360-807-50	FLANGEBOLT	*	1					
26	6513-770-022-10	THERMOSTAT	*	1					
27	6213-711-003-20	PIPE,WATER OUTLET	*	1					
28	V723-102-005-50	O-RING	*	1					
29	V231-360-802-50	FLANGEBOLT	*	2					

FIG. 18 COOLING FAN

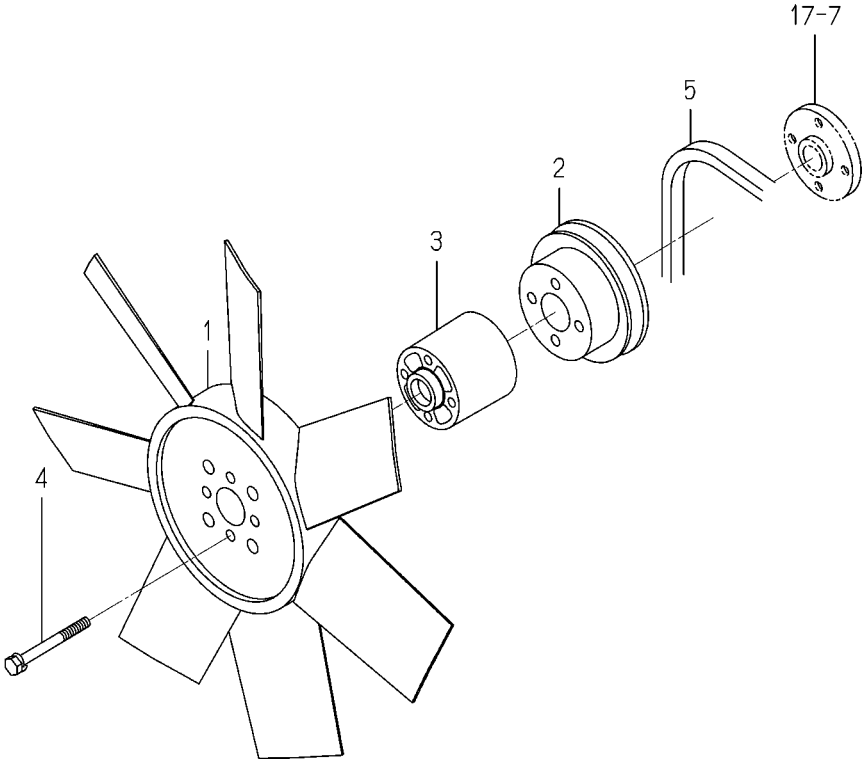

6003-480I-0100

KEY	PART CODE	DESCRIPTION	SPC	TYPE OF MODEL E393B06		ITC	COL	GRP	REMARKS
1	6213-660-007-00	FAN/COOLING	*	1					
2	6213-641-002-10	PULLEY,WATER PUMP	*	1					
3	6213-669-008-00	SPACER/FAN/48	*	1					
4	6209-030-044-00	BOLT/WS	*	4					
5	6213-671-003-00	BELT VHM034	*	1					

FIG. 19 INJECTION NOZZLE

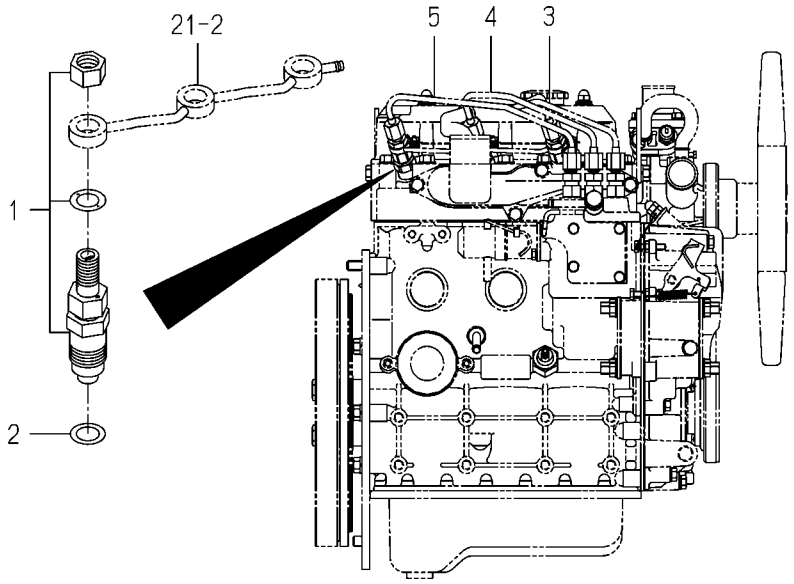

6003-501E-0100

KEY	PART CODE	DESCRIPTION	SPC	TYPE OF MODEL		ITC	COL	GRP	REMARKS
				E393B06					
1	6215-300-037-00	INJECTIONNOZZLE ASSY	*	3					FIG 026
2	6215-315-002-00	GASKET,NOZZLE	*	3					
3	6215-411-106-00	PIPE/INJECTION ASSY	*	1					
4	6215-411-107-00	PIPE/INJECTION ASSY	*	1					
5	6215-411-108-00	PIPE/INJECTION ASSY	*	1					

FIG. 20 INJECTION PUMP

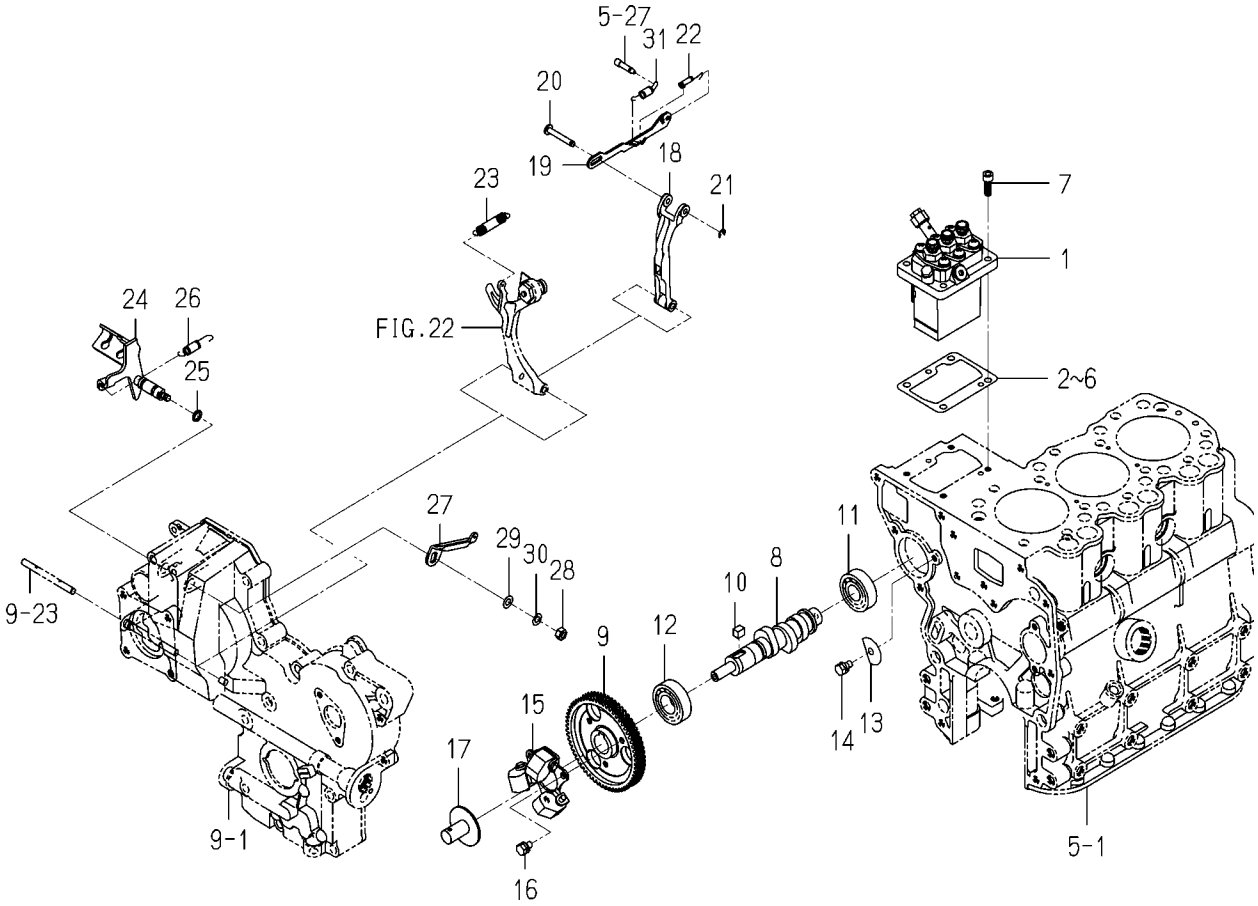

6003-510K-0100

KEY	PART CODE	DESCRIPTION	SPC	TYPE OF MODEL E393B06		ITC	COL	GRP	REMARKS
1	6215-600-109-30	INJECTIONPUMP ASSY	*	1					FIG 027
2	6219-752-001-00	SHIM/INJECTION P/0.3	*	1					
3	6219-752-002-00	SHIM/INJECTION P/0.1	*	1					
4	6219-752-003-00	SHIM/INJECTION P/0.2	*	1					
5	6219-752-004-00	SHIM/INJECTION P/0.4	*	1					
6	6219-752-005-00	SHIM/INJECTION P/0.5	*	1					
7	6209-056-001-00	BOLT/M6X18	*	4					
8	6215-621-001-40	CAMSHAFT/INJPUMP	*	1					
9	6212-524-002-20	GEAR/INJECTIONPUMP	*	1					
10	6209-730-005-00	KEY/07X05X09	*	1					
11	V600-110-620-30	BEARING,RB/6203	*	1					
12	V600-110-600-40	BEARING,RB/6004	*	1					
13	6212-535-002-00	PLATE,THRUST INJPUMP	*	1					
14	6901-910-612-00	BOLT,SEMS/M6X12	*	1					
15	6215-520-001-00	FLYWEIGHT	*	1					
16	6209-030-043-00	BOLT/M6X10	*	3					
17	6215-526-004-00	THRUSTPIECE	*	1					
18	6215-541-001-10	ARM/FLOATING COMP	*	1					
19	6215-543-001-10	LINK,CONTROL	*	1					
20	6215-542-006-00	PIN,CONTROL	*	1					
21	V710-140-004-00	RING,SNAP/ 4 E	*	1					
22	6215-549-003-00	SPRING,SETTING	*	1					
23	6215-531-021-00	SPRING/GOVERNER	*	1					
24	6215-541-024-30	LEVER/CONTROL COMP	*	1					
25	V720-101-900-80	O-RING/P 8	*	1					
26	6209-580-002-10	SPRING,RETURN	*	1					
27	6215-549-007-10	ARM/CONTROL	*	1					
28	6909-110-406-00	NUT	*	1					
29	V411-260-006-00	WASHER / M6	*	1					
30	V401-160-006-00	WASHER,SP/M 6	*	1					

FIG. 20 INJECTION PUMP

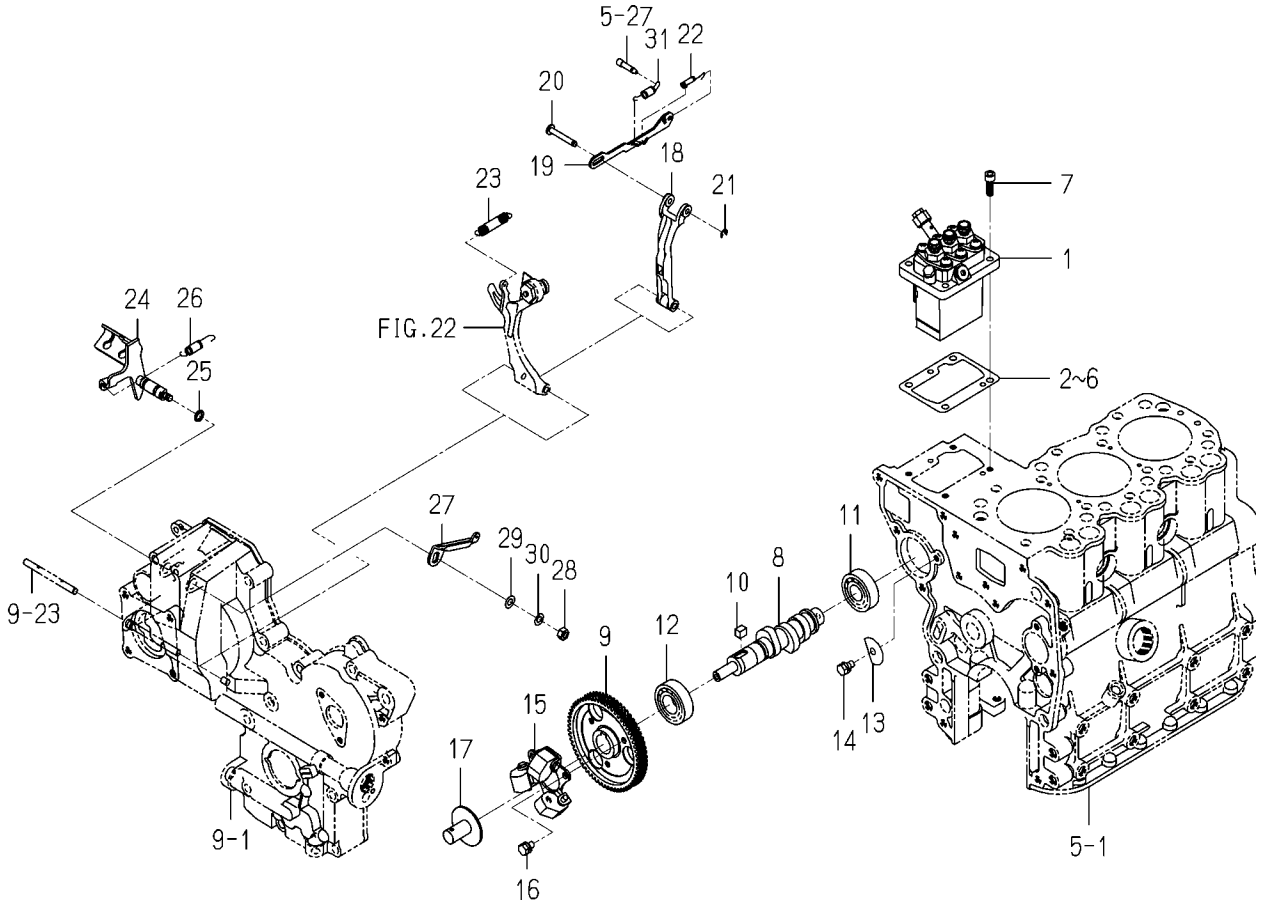

6003-510K-0100

KEY	PART CODE	DESCRIPTION	SPC	TYPE OF MODEL E393B06		ITC	COL	GRP	REMARKS
31	6215-549-008-10	SPRING/STARTING	*	1					

FIG. 21 FUEL PIPE

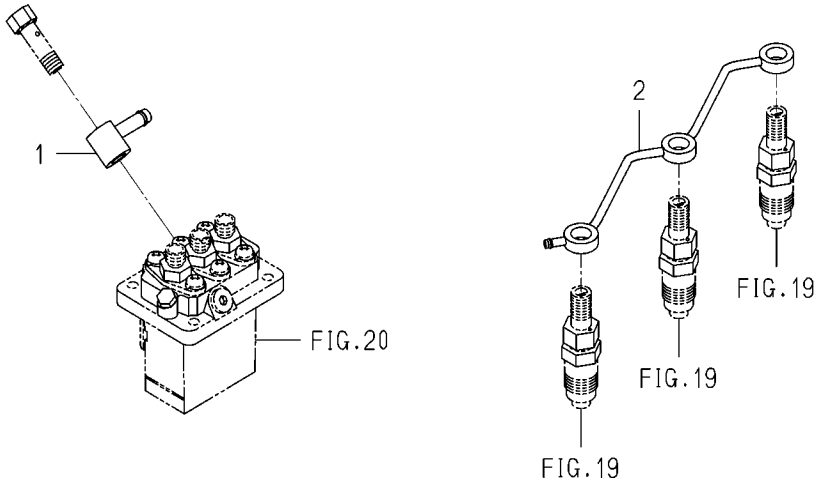

6003-550J-0100

KEY	PART CODE	DESCRIPTION	SPC	TYPE OF MODEL		ITC	COL	GRP	REMARKS
				E393B06					
1	6215-412-006-00	CONNECTOR/FUEL	*	1					
2	6215-411-074-10	PIPE/FUEL	*	1					

FIG. 22 ADAPTER

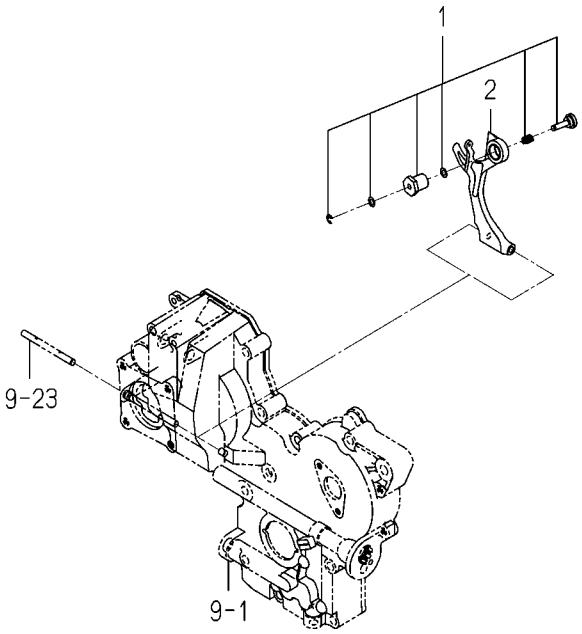

6003-560K-0100

KEY	PART CODE	DESCRIPTION	SPC	TYPE OF MODEL E393B06		ITC	COL	GRP	REMARKS
1	6215-548-012-00	ADAPTER/210X070 ASSY	*	1					
2	6215-541-016-30	ARM/TENSION	*	1					

FIG. 23 ELECTRIC (1)

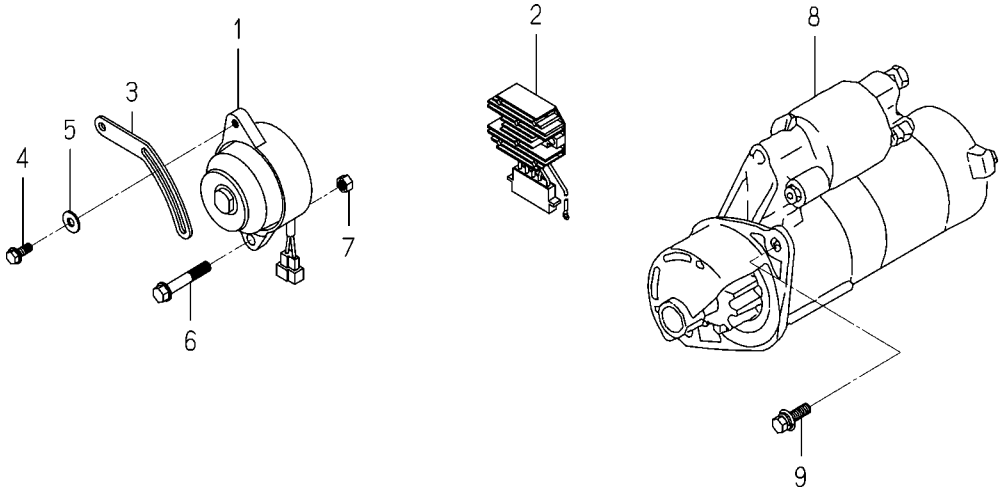

6004-801G-0100,6004-801G-0200

KEY	PART CODE	DESCRIPTION	SPC	TYPE OF MODEL E393B06		ITC	COL	GRP	REMARKS
1	6281-200-007-00	GENERATOR/12V-8.5A	*	1					FIG 029
2	6281-270-001-10	REGULATOR	*	1					
3	6213-674-004-20	PLATE/ADJUST	*	1					
4	V231-360-802-00	FLANGEBOLT	*	1					
5	1373-121-001-00	WASHER/9X22X2	*	1					
6	6209-046-057-00	BOLT/FLANGE	*	1					
7	6909-110-410-00	NUT/M10	*	1					
8	6281-100-014-00	STARTER ASSY	*	1					FIG 028
9	6209-030-085-00	BOLT/WS	*	2					

FIG. 24 ELECTRIC (2)

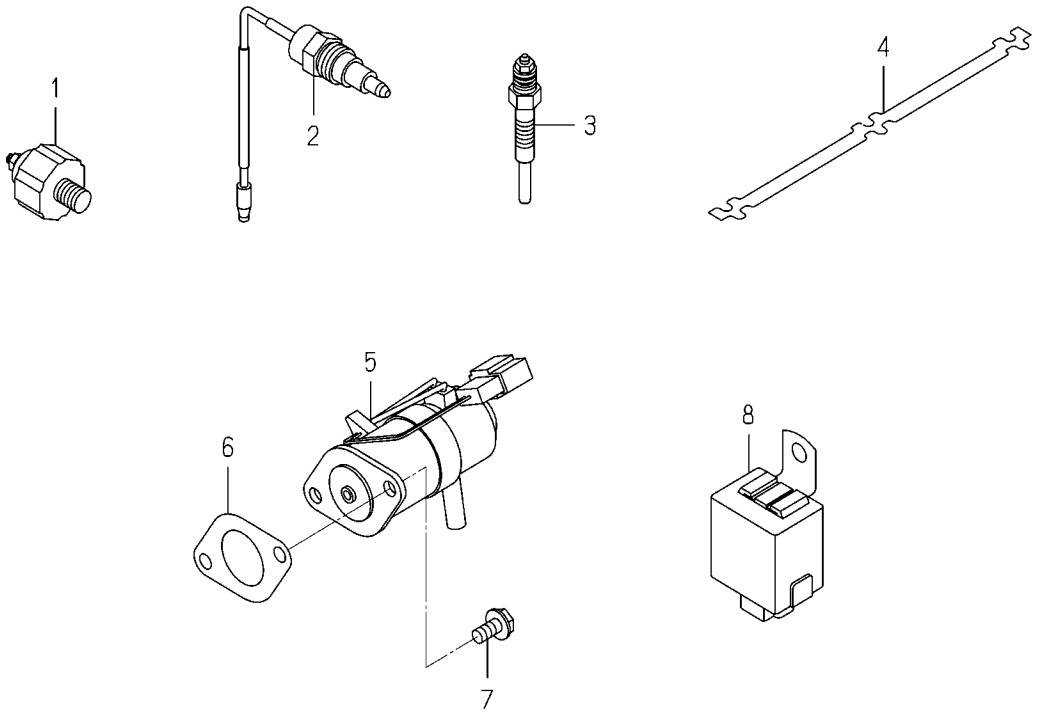

6003-820J-0100,6003-820J-0200

KEY	PART CODE	DESCRIPTION	SPC	TYPE OF MODEL E393B06		ITC	COL	GRP	REMARKS
1	6281-971-003-00	SWITCH/OILPRESSURE	*	1					
2	6282-450-002-00	SWITCH/OVERHEAT	*	1					
3	6281-410-010-00	GLOWPLUG	*	3					
4	6219-732-016-00	CONNECTOR/GLOWPLUG	*	1					
5	6281-910-001-00	SOLENOID	*	1					
6	6209-630-002-10	GASKET	*	1					
7	V230-360-601-20	FLANGEBOLT	*	2					
8	6281-920-001-00	RELAY,SOLENOID	*	1					

FIG. 25 REPAIR PARTS (OPTION)

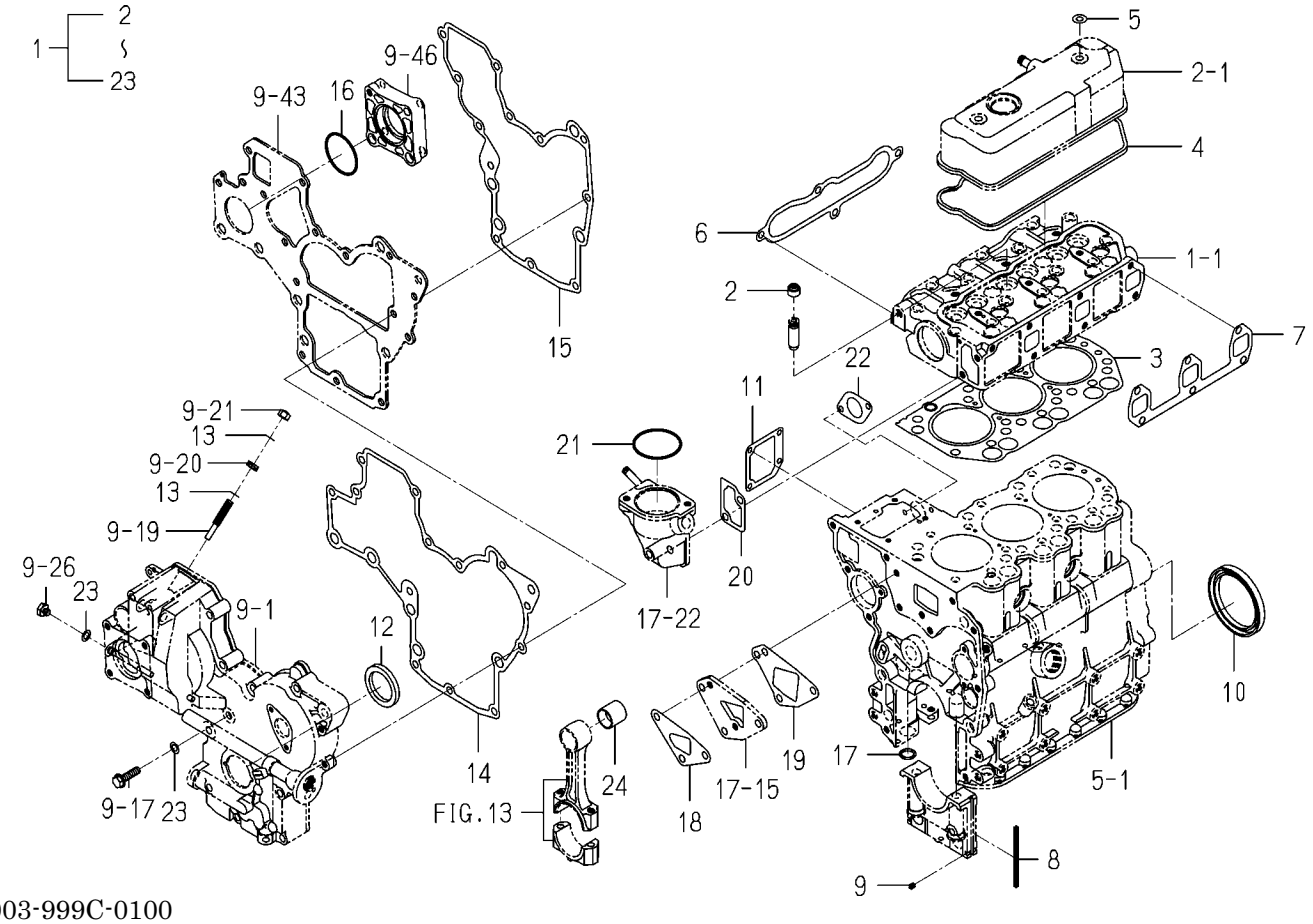

6003-999C-0100

KEY	PART CODE	DESCRIPTION	SPC	TYPE OF MODEL E393B06		ITC	COL	GRP	REMARKS
1	6287-810-026-10	REPAIR/ENGINESET	T	1					
2	6212-569-002-00	SEAL,OIL	T	6					
3	6211-141-008-30	GASKET/CYLINDERHEAD	T	1					
4	6211-173-003-00	SEAL,CYL.HEAD COVER	T	1					
5	6209-572-003-00	GASKET	T	2					
6	6214-115-001-20	GASKET,INLET MANIFOL	T	1					
7	6214-145-001-30	GASKET,EXH.MANIFOLD	T	1					
8	6211-258-001-00	SEAL,BEARING CAP	T	4					
9	6211-258-002-00	SEAL,BEARING CAP/7	T	2					
10	6209-625-012-00	OILSEAL	T	1					
11	6211-292-001-20	GASKET/COVER	T	1					
12	6209-625-002-00	SEAL,OIL	T	1					
13	6209-920-002-00	PACKING	T	2					
14	6211-312-003-20	GASKET/GEARCASE	T	1					
15	6211-312-004-20	GASKET/PLATE	T	1					
16	V723-102-005-00	O-RING 1A S50	T	1					
17	V720-102-401-50	O-RING/P15	T	1					
18	6213-614-003-10	GASKET/WATER PUMP	T	1					
19	6213-614-006-10	GASKET/SPACER	T	1					
20	6213-743-002-10	GASKET/HOUSING	T	1					
21	V723-102-005-50	O-RING	T	1					
22	6209-630-002-10	GASKET	T	1					
23	6209-500-003-00	WASHER/08X14X01	T	2					

FIG. 26 COMPONENT PARTS FOR 6215-300-037-00 ON Fig.19

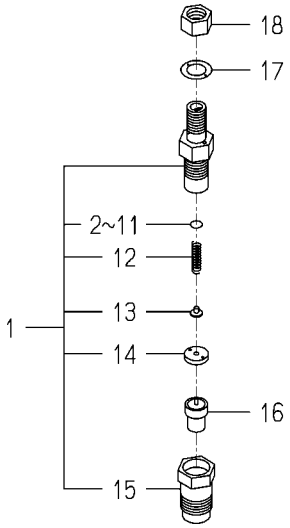

6215-300-037-0E

KEY	PART CODE	DESCRIPTION	SPC	TYPE OF MODEL E393B06		ITC	COL	GRP	REMARKS
1	6215-330-022-00	HOLDER/NOZZLE ASSY	*	3					
2	6215-345-044-00	SHIM/0.10	*	3					
3	6215-345-045-00	SHIM/0.20	*	3					
4	6215-345-046-00	SHIM/0.30	*	3					
5	6215-345-047-00	SHIM/0.40	*	3					
6	6215-345-048-00	SHIM/0.50	*	3					
7	6215-345-049-00	SHIM/0.52	*	3					
8	6215-345-050-00	SHIM/0.54	*	3					
9	6215-345-051-00	SHIM/0.56	*	3					
10	6215-345-052-00	SHIM/0.58	*	3					
11	6215-345-053-00	SHIM/0.80	*	3					
12	6215-343-002-00	SPRING,NOZZLE	*	3					
13	6215-342-002-00	SEAT,SPRING	*	3					
14	6215-339-004-00	SPACER	*	3					
15	6215-332-006-00	NUT/NOZZLERETAINING	*	3					
16	6215-311-005-00	NOZZLE	*	3					
17	6215-359-003-00	GASKET	*	3					
18	6215-359-004-00	NUT	*	3					

FIG. 27 COMPONENT PARTS FOR 6215-600-109-30 ON Fig.20

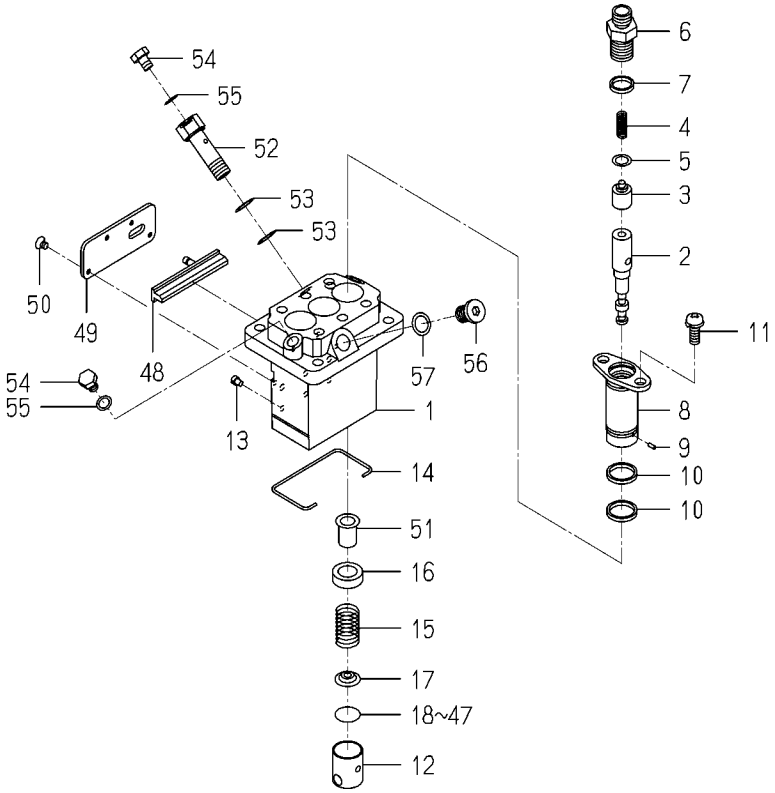

6215-600-109-3G

KEY	PART CODE	DESCRIPTION	SPC	TYPE OF MODEL E393B06		ITC	COL	GRP	REMARKS
1	6215-611-002-00	HOUSING,PUMP	*	1					
2	6215-631-017-00	PLUNGER ASSY	*	3					
3	6215-641-007-00	DELIVERYVALVE	*	3					
4	6215-643-002-00	SPRING DELIVERY VALV	*	3					
5	6215-649-003-00	GASKET	*	3					
6	6215-644-002-00	HOLDER DELIVERY VALV	*	3					
7	6215-649-004-10	ORING	*	3					
8	6215-635-002-00	SLEEVE,FRANGE	*	3					
9	6215-649-005-00	PIN	*	3					
10	6215-649-006-10	ORING	*	6					
11	6215-649-007-00	SCREW	*	6					
12	6215-622-002-00	TAPPET	*	3					
13	6215-629-017-00	PIN	*	3					
14	6215-629-018-00	RING,SNAP	*	1					
15	6215-634-002-00	SPRING,PLUNGER	*	3					
16	6215-639-006-00	SEAT,SPRING	*	3					
17	6215-639-007-00	SEAT,SPRING	*	3					
18	6215-629-020-00	PLATE/T=1.80	*	1					
19	6215-629-021-00	PLATE/T=1.85	*	1					
20	6215-629-022-00	PLATE/T=1.90	*	1					
21	6215-629-023-00	PLATE/T=1.95	*	1					
22	6215-629-024-00	PLATE/T=2.00	*	1					
23	6215-629-025-00	PLATE/T=2.05	*	1					
24	6215-629-026-00	PLATE/T=2.10	*	1					
25	6215-629-027-00	PLATE/T=2.15	*	3					
26	6215-629-028-00	PLATE/T=2.20	*	1					
27	6215-629-029-00	PLATE/T=2.25	*	1					
28	6215-629-030-00	PLATE/T=2.30	*	1					
29	6215-629-031-00	PLATE/T=2.35	*	1					
30	6215-629-032-00	PLATE/T=2.40	*	1					

FIG. 27 COMPONENT PARTS FOR 6215-600-109-30 ON Fig.20

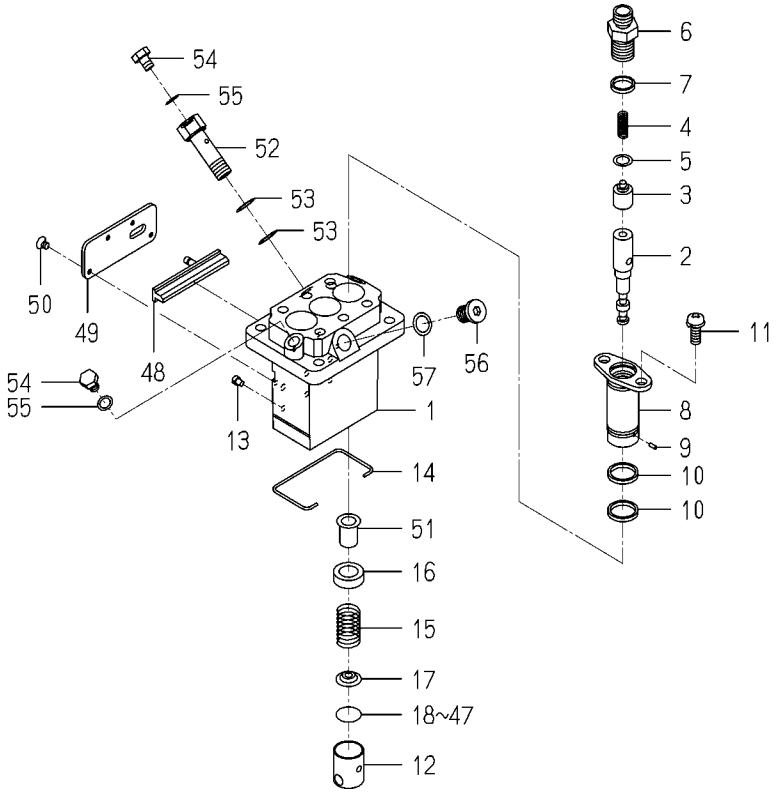

6215-600-109-3G

KEY	PART CODE	DESCRIPTION	SPC	TYPE OF MODEL E393B06		ITC	COL	GRP	REMARKS
31	6215-629-033-00	PLATE/T=2.45	*	1					
32	6215-629-034-00	PLATE/T=2.50	*	1					
33	6215-629-068-00	PLATE/T=1.825	*	1					
34	6215-629-069-00	PLATE/T=1.875	*	1					
35	6215-629-070-00	PLATE/T=1.925	*	1					
36	6215-629-071-00	PLATE/T=1.975	*	1					
37	6215-629-072-00	PLATE/T=2.025	*	1					
38	6215-629-073-00	PLATE/T=2.075	*	1					
39	6215-629-074-00	PLATE/T=2.125	*	1					
40	6215-629-075-00	PLATE/T=2.175	*	1					
41	6215-629-076-00	PLATE/T=2.225	*	1					
42	6215-629-077-00	PLATE/T=2.275	*	1					
43	6215-629-078-00	PLATE/T=2.325	*	1					
44	6215-629-079-00	PLATE/T=2.375	*	1					
45	6215-629-080-00	PLATE/T=2.425	*	1					
46	6215-629-081-00	PLATE/T=2.475	*	1					
47	6215-629-082-00	PLATE/T=2.525	*	1					
48	6215-637-008-00	CONTROLROD	*	1					
49	6215-612-016-00	PLATE	*	1					
50	6215-619-012-00	SCREW	*	4					
51	6215-635-008-00	CONTROLSLEEVE	*	3					
52	6215-619-030-00	EYEBOLT	*	1					
53	6215-619-014-00	GASKET	*	2					
54	6215-619-015-00	BOLT	*	2					
55	6215-619-016-00	GASKET	*	2					
56	6215-619-026-00	PLUG	*	1					
57	6215-619-014-00	GASKET	*	1					

FIG. 28 COMPONENT PARTS FOR 6281-100-014-00 ON Fig.23

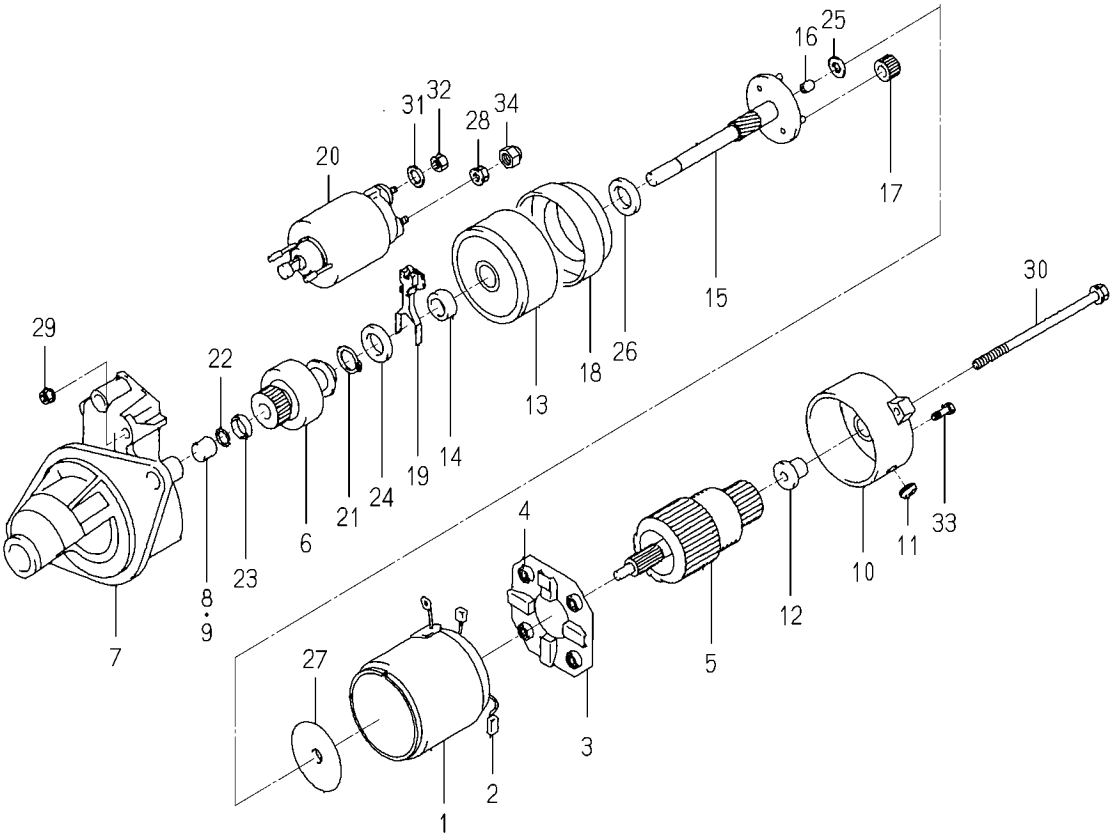

6281-100-014-0A

KEY	PART CODE	DESCRIPTION	SPC	TYPE OF MODEL E393B06		ITC	COL	GRP	REMARKS
1	6281-111-009-00	YOKE/STARTER ASSY	*	1					
2	6281-119-009-00	BRUSH/STARTER	*	2					
3	6281-118-007-00	HOLDER/STARTER ASSY	*	1					
4	6281-117-003-00	SPRING/STARTERBRUSH	*	4					
5	6281-121-010-00	ARMATURE/STARTE ASSY	*	1					
6	6281-124-011-00	CLUTCH/STARTER ASSY	*	1					
7	6281-129-064-00	HOUSING/STARTER ASSY	*	1					
8	6281-129-080-00	BEARING/NEEDLE	*	1					
9	6281-129-058-00	BEARING/NEEDLE	*	1					
10	6281-115-017-00	FRAME/COMMUTATOR END	*	1					
11	6281-115-018-00	COVER	*	1					
12	6281-129-065-00	BEARING/OILLESS	*	1					
13	6281-129-066-00	BEARING/WITH SHOCKAB	*	1					
14	6281-129-067-00	BEARING/OILLESS	*	1					
15	6281-129-068-00	SHAFT/STARTER PLANET	*	1					
16	6281-129-069-00	BEARING/OILLESS	*	1					
17	6281-129-070-00	GEAR/STARTER PLANETA	*	3					
18	6281-129-071-00	GEAR/STARTERINTERNAL	*	1					
19	6281-127-003-00	LEVER/PINIONDRIVE	*	1					
20	6281-151-014-00	SWITCH/MAGNETIC ASSY	*	1					
21	6281-129-072-00	RING/SNAP	*	1					
22	6281-129-073-00	RING/SNAP	*	1					
23	6281-129-074-00	NUT/PINIONSTOP	*	1					
24	6281-129-075-00	WASHER/SK	*	1					
25	6281-129-076-00	WASHER/SK	*	1					
26	6281-129-077-00	WASHER/SK	*	1					
27	6281-129-078-00	PLATE	*	1					
28	6281-129-030-00	NUT	*	1					
29	6281-129-029-00	NUT	*	2					
30	6281-129-043-00	BOLT/THROUGH	*	2					

FIG. 28 COMPONENT PARTS FOR 6281-100-014-00 ON Fig.23

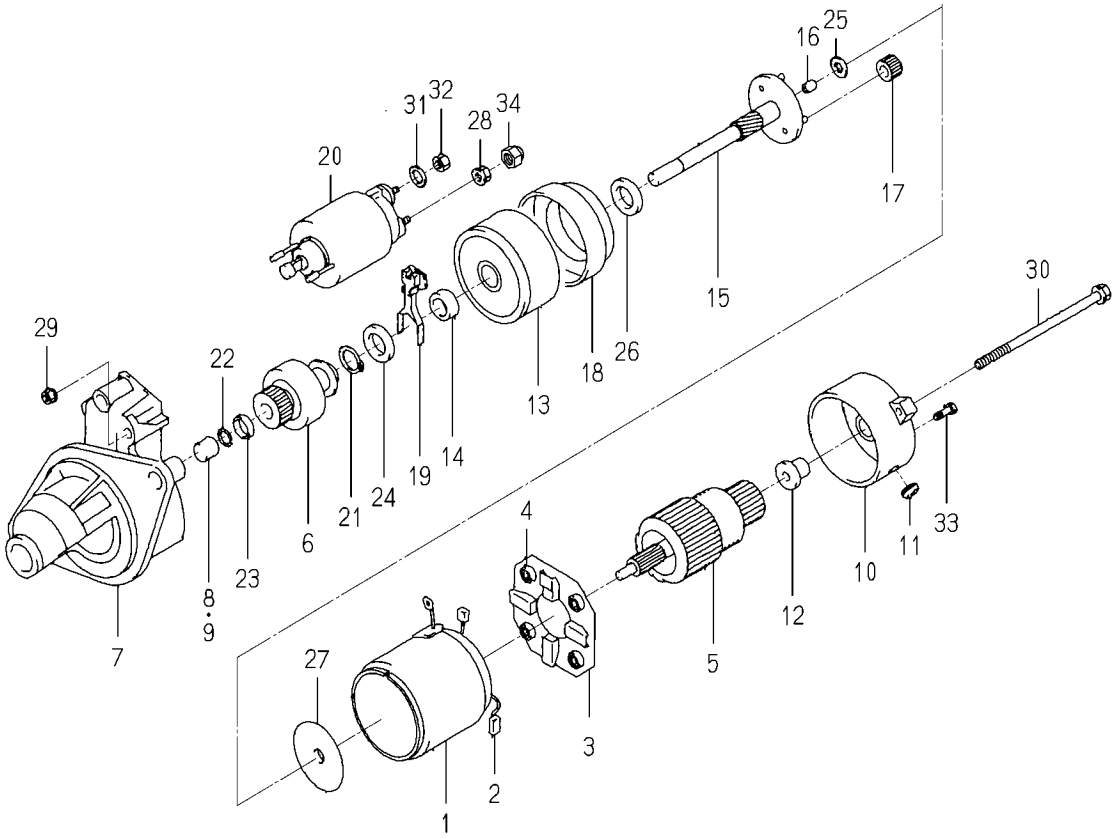

6281-100-014-0A

KEY	PART CODE	DESCRIPTION	SPC	TYPE OF MODEL E393B06		ITC	COL	GRP	REMARKS
31	6909-150-508-00	WASHER	*	1					
32	6909-110-408-00	NUT/M8	*	1					
33	6281-129-062-00	SCREW	*	2					
34	6281-129-079-00	NUT	*	1					

FIG. 29 COMPONENT PARTS FOR 6281-200-007-00 ON Fig.23

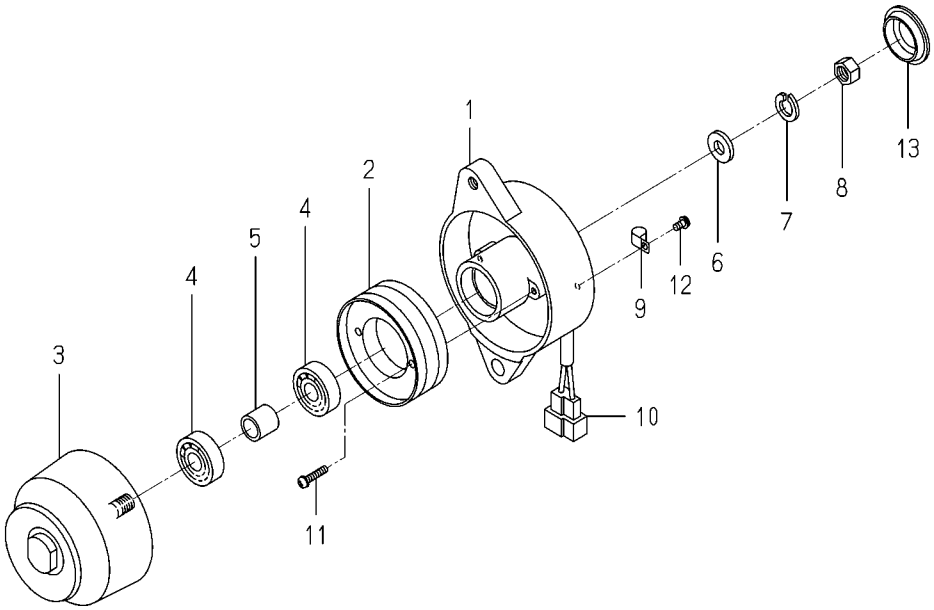

6281-200-007-0E

KEY	PART CODE	DESCRIPTION	SPC	TYPE OF MODEL E393B06		ITC	COL	GRP	REMARKS
1	6281-213-016-10	PLATE COMP	*	1					
2	6281-211-004-00	STARTER	*	1					
3	6281-222-010-10	PULLEY COMP	*	1					
4	6281-229-031-00	BEARING,BALL	*	2					
5	6281-229-021-00	COLLAR	*	1					
6	6281-229-022-00	WASHER	*	1					
7	6281-229-023-00	WASHER	*	1					
8	6281-229-024-00	NUT	*	1					
9	6281-229-025-10	CLAMP	*	1					
10	6281-229-026-00	COUPLER	*	1					
11	6281-229-027-00	SCREW	*	2					
12	6281-229-028-00	SCREW	*	1					
13	6281-214-006-00	CAP	*	1					

C H A S S I S

FIG. 1 RADIATOR SYSTEM

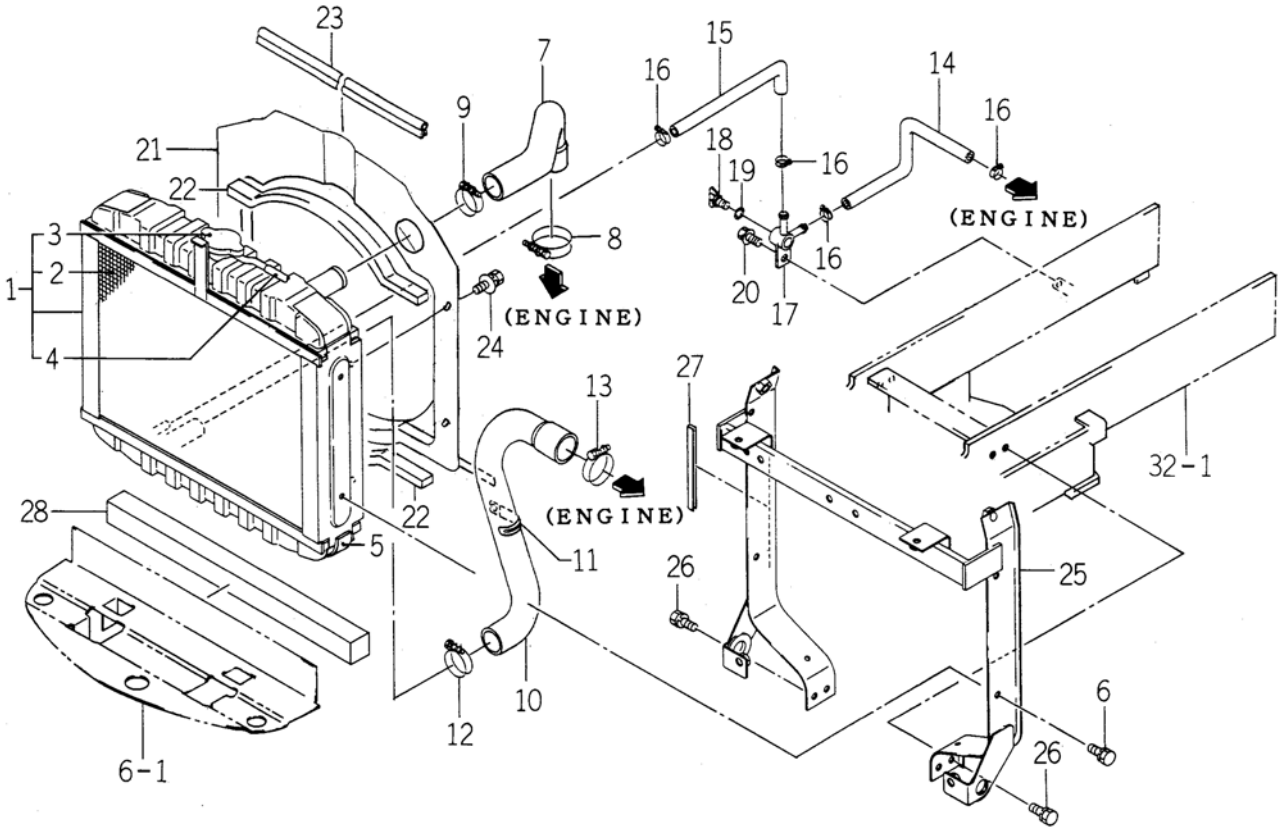

1738-102 -0100

KEY	PART CODE	DESCRIPTION	SPC	TYPE OF MODEL TM3160		ITC	COL	GRP	REMARKS
1	1726-102-210-00	RADIATOR ASSY	*	1	n°000001 au				A partir du
2	1726-102-211-00	NET/WIRE COMP	*	1	n°002124				N° 002125
3	1614-102-213-00	CAP	*	1					prendre la
4	1614-102-214-00	HOSE	*	1					Réf 1705 102 2000 0
5	1612-102-005-00	INSULATOR	*	1					Idem SGR17H3
6	V211-260-801-60	BOLT,SEMS (S) M8X16	*	4					
7	1675-102-004-00	HOSE/RADIATOR/INLET	*	1					
8	J061-236-044-00	CLAMP/WIRE/36-44	*	1					
9	J061-230-038-00	CLAMP/WIRE/30-38	*	1					
10	1675-102-006-00	HOSE/RADIATOR/OUTLET	*	1					
11	1425-621-004-00	HOLDER/JE/9-9	*	1					
12	J061-224-032-00	CLAMP/WIRE/24-32	*	1					
13	J061-236-044-00	CLAMP/WIRE/36-44	*	1					
14	1617-102-005-00	HOSE/170	*	1					
15	1560-104-006-60	HOSE/290	*	1					
16	J061-210-015-00	CLAMP/WIRE/10-15	*	4					
17	1560-104-010-40	CONNECTOR	*	1					
18	1424-101-203-00	PLUG	*	1					
19	1424-101-204-00	PACKING	*	1					
20	V211-360-802-00	BOLT/SP	*	1					
21	1683-102-220-00	SHROUD COMP	*	1					
22	1675-102-002-00	INSULATOR	*	2					
23	1716-102-003-00	INSULATOR/550	*	1					
24	V210-360-601-20	BOLT,SEMS	*	4					
25	1726-102-200-10	BRACKET/RADIATO COMP	*	1					
26	V211-260-801-60	BOLT,SEMS (S) M8X16	*	4					
27	1705-102-014-00	TRIM/130	*	1					
28	1726-102-001-00	INSULATOR	*	1					

FIG. 2 MUFFLER SYSTEM

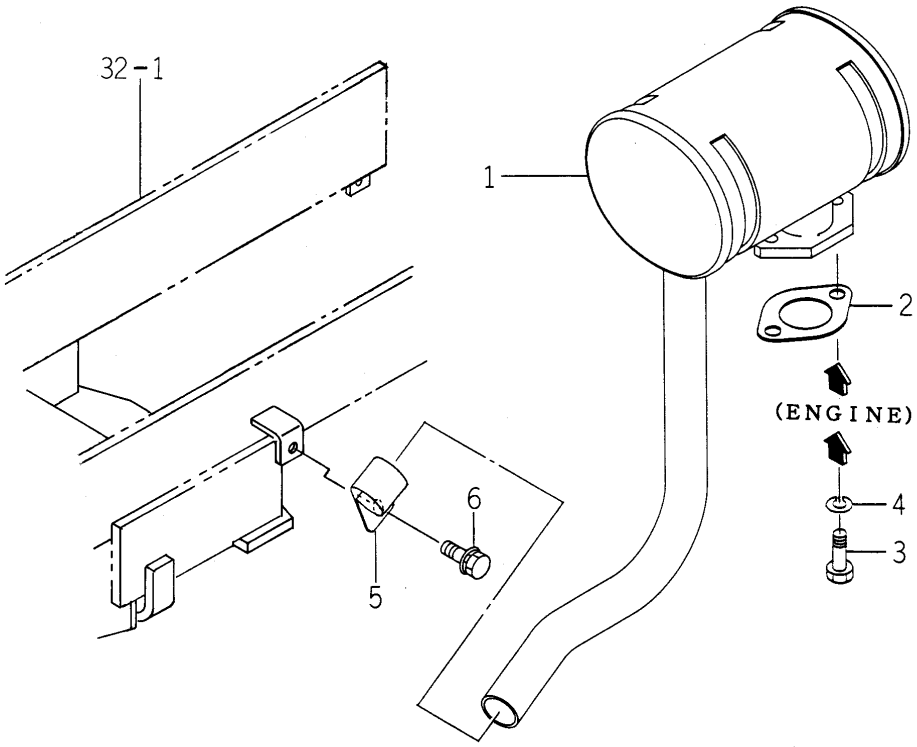

1726-103 -0100

KEY	PART CODE	DESCRIPTION	SPC	TYPE OF MODEL TM3160		ITC	COL	GRP	REMARKS
1	1726-103-200-00	MUFFLER COMP	*	1					
2	1594-105-001-00	GASKET	*	1					
3	V203-361-003-00	BOLT	*	2					
4	V401-160-010-00	WASHER,SP/M10	*	2					
5	1672-103-001-00	CLAMP/32	*	1					
6	V211-360-802-00	BOLT/SP	*	1					

FIG. 3 AIR CLEANER SYSTEM

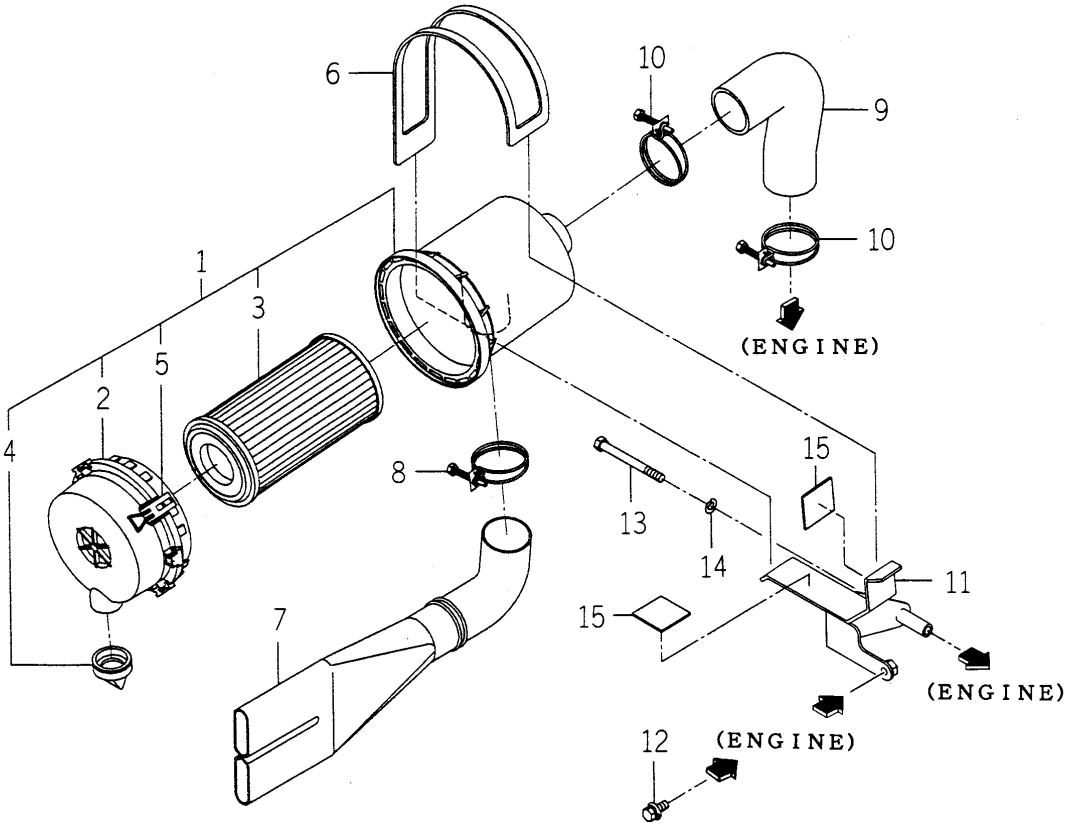

1726-104 -0100

KEY	PART CODE	DESCRIPTION	SPC	TYPE OF MODEL TM3160		ITC	COL	GRP	REMARKS
1	1675-104-210-10	CLEANER/AIR ASSY	*	1					
2	1675-104-211-00	COVER ASSY	*	1					
3	1675-104-213-00	ELEMENT ASSY	*	1					
4	1544-104-205-00	VALVE	*	1					
5	1650-104-201-00	CLIP	*	2					
6	1703-104-003-00	BAND/CLEANER	*	1					
7	1716-104-001-00	PIPE/CLEANER	*	1					
8	J061-242-050-00	CLAMP/WIRE/42-50	*	1					
9	1675-104-002-00	HOSE/CLEANER/OUTLET	*	1					
10	J061-247-055-00	CLAMP/WIRE/47-55	*	2					
11	1726-104-200-00	BRACKET/CLEANER COMP	*	1					
12	V211-360-803-50	BOLT/SP	*	1					
13	V201-260-808-00	BOLT/M 8X80	*	1					
14	V401-160-008-00	WASHER,SP/M 8	*	1					
15	1427-111-229-00	CUSHION,RUBBER	*	2					

FIG. 4 FILTER SYSTEM

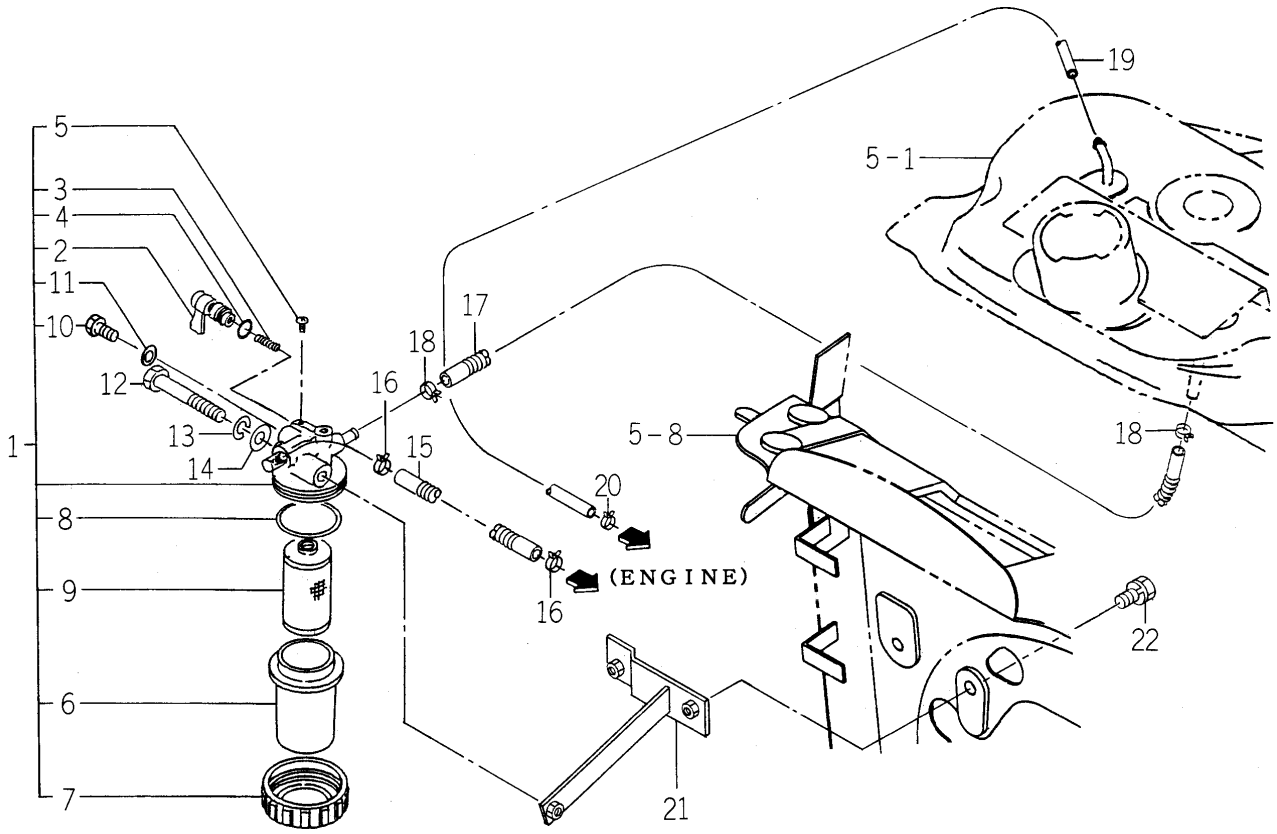

1738-105 -0100

KEY	PART CODE	DESCRIPTION	SPC	TYPE OF MODEL TM3160		ITC	COL	GRP	REMARKS
1	1509-105-210-00	FILTER/FUEL	*	1					
2	1444-102-202-00	LEVER	*	1					
3	1415-102-007-00	SPRING,VALVE	*	1					
4	V720-102-401-00	O-RING/P10A	*	1					
5	1415-102-008-00	VIS	*	1					
6	1440-103-201-00	CAP	*	1					
7	1444-102-204-00	NUT,RING	*	1					
8	V720-103-504-40	O-RING/P44	*	1					
9	1672-105-211-00	ELEMENT	*	1					
10	1572-102-003-00	BOLT/M06X08/APSET	*	2					
11	1415-102-013-00	PACKING	*	2					
12	V201-260-806-50	BOLT/M 8X65	*	1					
13	V401-160-008-00	WASHER,SP/M 8	*	1					
14	V411-260-008-00	WASHER,PL/M 8	*	1					
15	1716-105-001-00	HOSE/08X13X300	*	1					
16	J062-119-126-00	CLIP/HOSE/11.9-12.6	*	2					
17	1726-105-001-10	HOSE/08X13X110	*	1					
18	J062-119-126-00	CLIP/HOSE/11.9-12.6	*	2					
19	1612-105-002-00	HOSE/650	*	1					
20	J062-081-087-00	CLIP/HOSE/8.1-8.7	*	1					
21	1738-105-210-00	BRACKET/FILTER COMP	*	1					
22	V211-260-801-60	BOLT,SEMS (S) M8X16	*	2					

FIG. 5 FUEL TANK SYSTEM

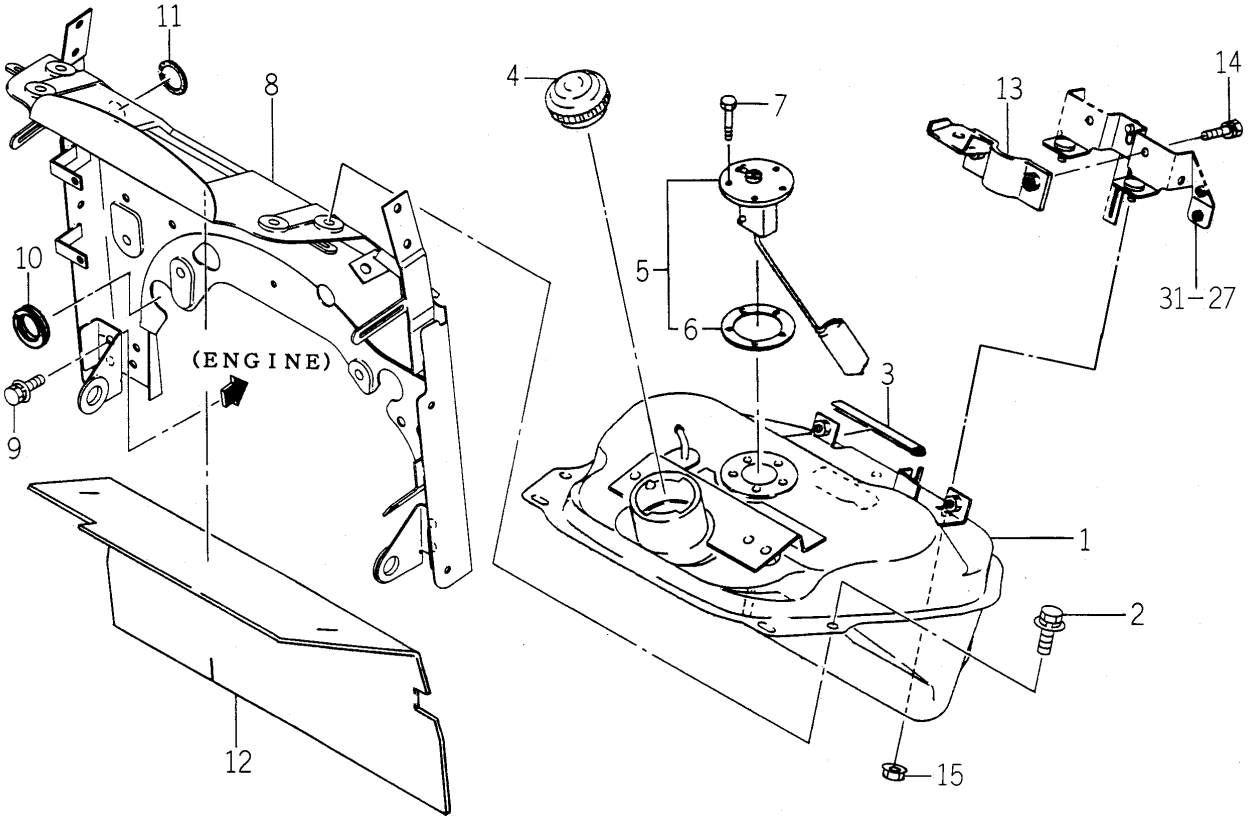

1738-111 -0100

KEY	PART CODE	DESCRIPTION	SPC	TYPE OF MODEL TM3160		ITC	COL	GRP	REMARKS
1	1726-111-220-00	TANK/FUEL COMP	*	1					
2	V211-360-802-00	BOLT/SP	*	4					
3	1672-111-002-00	PAD/120	*	1					
4	1682-111-300-00	CAP/FUEL ASSY	*	1					
5	1612-111-210-00	GAUGE/FUEL ASSY	*	1					
6	1416-621-037-00	PACKING/RUBBER	*	1					
7	V200-260-501-0B	BOLT/SEAL	*	5					
8	1726-111-200-20	BRACKET/TANK COMP	*	1					
9	V211-360-802-50	BOLT/SP	*	4					
10	1612-690-001-00	INSULATOR/36	*	1					
11	1600-616-006-00	INSULATOR/75	*	1					
12	1726-111-001-00	INSULATOR	*	1					
13	1672-111-230-00	BRACKET/LEVER COMP	*	1					
14	V211-260-801-60	BOLT,SEMS (S) M8X16	*	2					
15	V362-260-008-00	NUT/WASHER	*	2					

FIG. 6 BATTERY SYSTEM

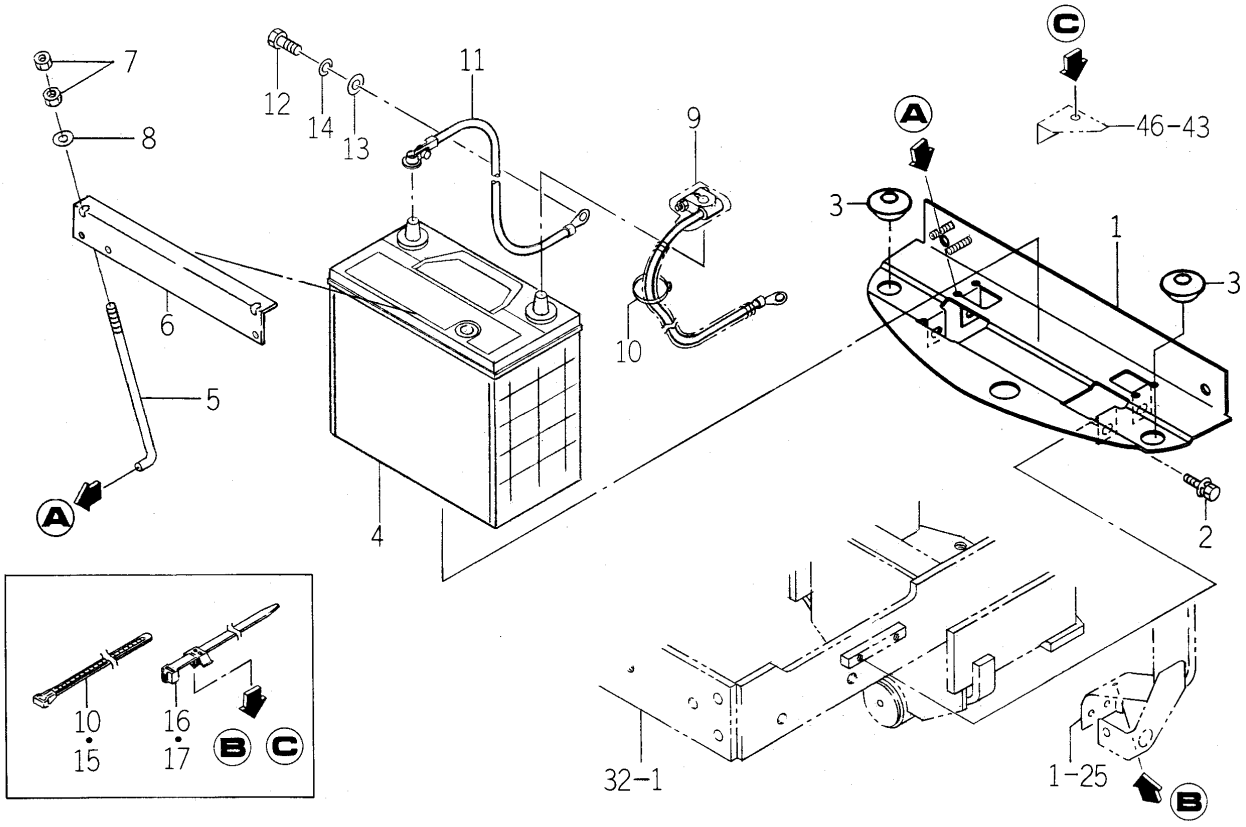

1738-112 -0100

KEY	PART CODE	DESCRIPTION	SPC	TYPE OF MODEL TM3160		ITC	COL	GRP	REMARKS
1	1738-112-210-00	BRACKET/BATTERY COMP	*	1					
2	V211-360-801-60	BOLT,SEMS (SP)	*	6					
3	1421-603-004-00	BUSH,LEVER	*	2					
4	1726-112-210-00	BATTERY/46B24R ASSY	*	1					
5	1675-112-002-00	BOLT/BATTERY	*	2					
6	1682-112-006-10	PLATE/BATTERY	*	1					
7	V301-260-006-00	NUT/M 6	*	4					
8	V411-260-006-00	WASHER / M6	*	2					
9	1716-112-230-00	CABLE/BATTERY ASSY	*	1					
10	1376-402-003-00	BAND,WIRE/140	*	1					
11	1726-112-002-10	CABLE/EARTH	*	1					
12	V201-261-001-60	BOLT/M10X16	*	1					
13	V411-260-010-00	WASHER/M10	*	1					
14	V401-160-010-00	WASHER,SP/M10	*	1					
15	1376-402-003-00	BAND,WIRE/140	*	1					
16	1560-666-004-00	BAND	*	1					
17	1560-666-004-00	BAND	*	1					

FIG. 7 ACCELERATOR SYSTEM

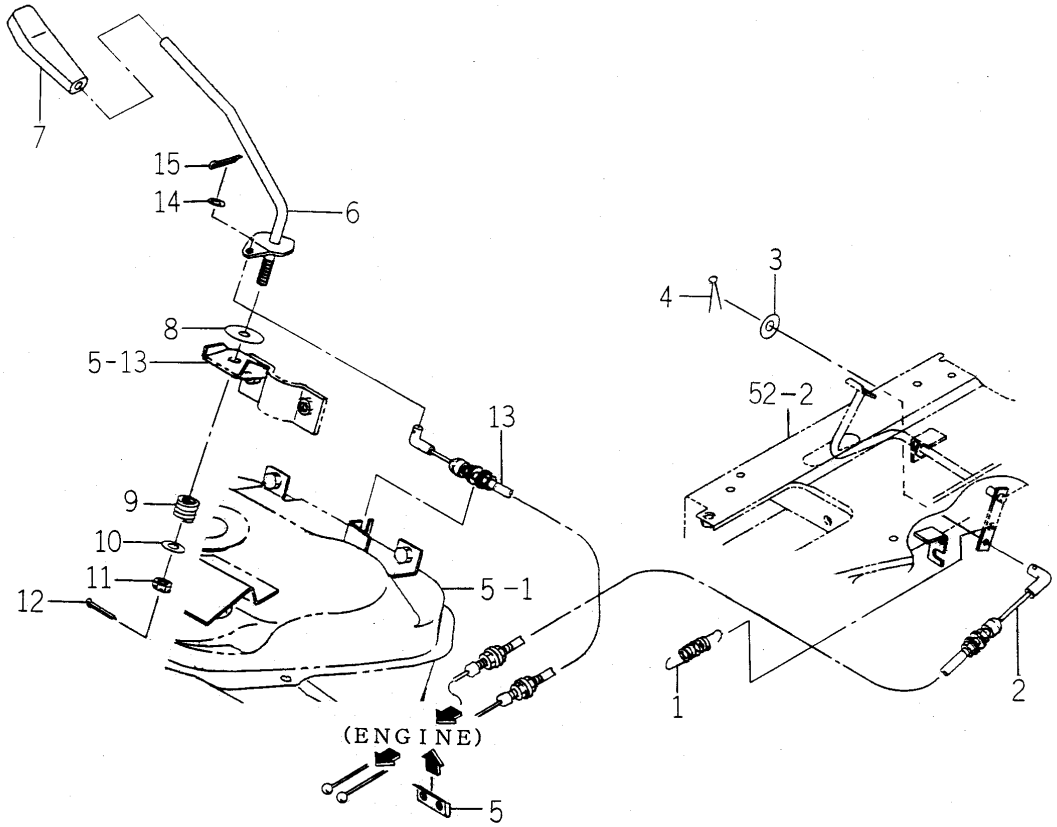

1716-116A-0100,1738-117 -0100

KEY	PART CODE	DESCRIPTION	SPC	TYPE OF MODEL TM3160		ITC	COL	GRP	REMARKS
1	1414-312-002-00	SPRING,TENSION/53	*	1					
2	1716-116-200-00	CABLE/PEDAL ASSY	*	1					
3	V411-260-006-00	WASHER / M6	*	1					
4	V500-162-002-00	PIN,SPLIT/2 X20	*	1					
5	1675-116-001-00	HOLDER	*	1					
6	1612-117-200-20	LEVER COMP	*	1					
7	1646-116-051-00	GRIP/THROTTLE	*	1					
8	1600-117-002-00	LINING/11X40X03	*	1					
9	1404-117-008-00	SPRING,PRESS/22	*	1					
10	2130-713-002-10	WASHER	*	1					
11	V328-262-110-00	NUT	*	1					
12	V500-162-502-50	PIN,SPLIT/2.5X25	*	1					
13	1675-117-210-20	CABLE/ACCELERATOR	*	1					
14	V411-260-006-00	WASHER / M6	*	1					
15	V500-162-002-00	PIN,SPLIT/2 X20	*	1					

FIG. 8 MAIN CLUTCH,INPUT SHAFT SYSTEM

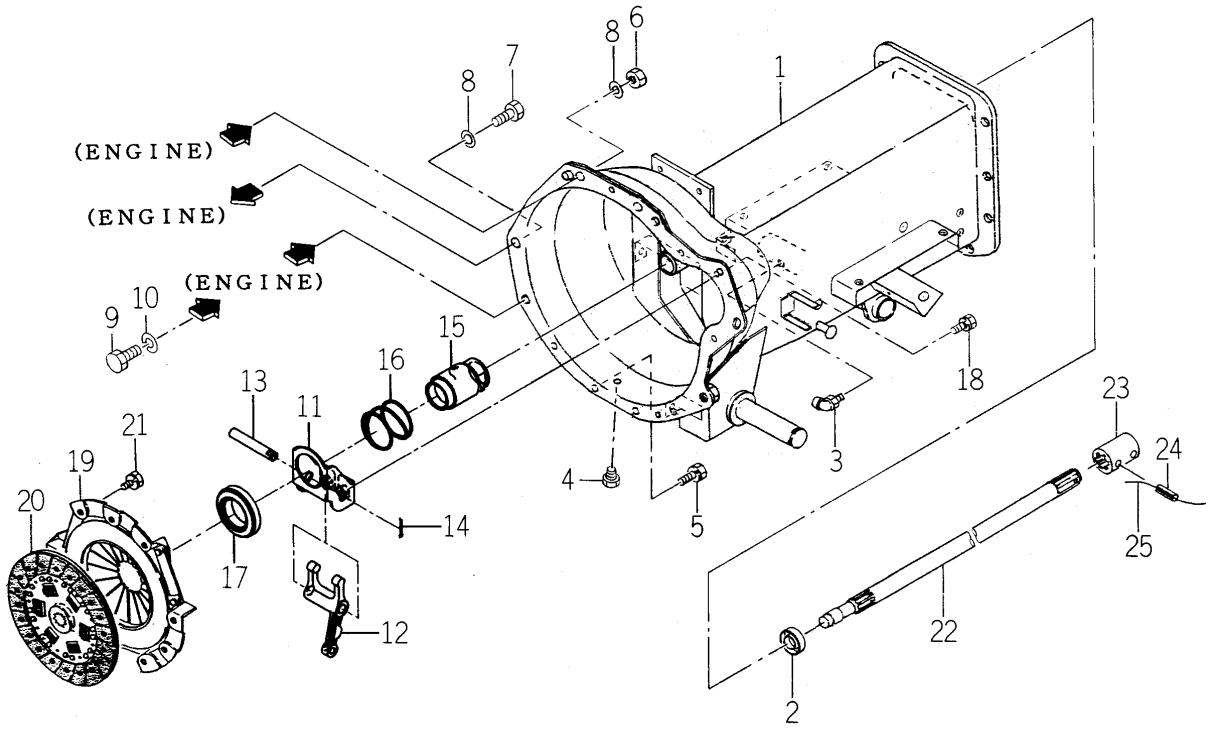

1738-120 -0100,1738-125 -0100

KEY	PART CODE	DESCRIPTION	SPC	TYPE OF MODEL TM3160		ITC	COL	GRP	REMARKS
1	1738-120-210-20	HOUSING/CLUTCH COMP	*	1					
2	V744-120-350-70	SEAL,OIL/TC20357	*	1					
3	V763-150-000-00	NIPPLE,GREASE/PT1/8	*	1					
4	V782-160-000-2T	PLUG/SCREW/SEAL	*	1					
5	V211-260-801-60	BOLT,SEMS (S) M8X16	*	4					
6	V334-460-010-00	NUT/M10 7T P=1.25	*	2					
7	V203-361-002-00	BOLT/M10X1.25X20	*	2					
8	V401-160-010-00	WASHER,SP/M10	*	4					
9	V201-361-202-50	BOLT/M12X25	*	2					
10	V401-160-012-00	WASHER,SP/M12	*	2					
11	1434-122-230-10	BRACKET COMP	*	1					
12	1435-122-002-00	FORK/RELEASE	*	1					
13	1672-120-006-00	PIN/12X75	*	1					
14	V500-163-002-00	PIN,SPLIT/3 X20	*	1					
15	1672-120-007-00	SLEEVE	*	1					
16	1434-120-005-00	SPRING/HC50	*	1					
17	1491-120-001-00	BEARING,CLUTCH RS	*	1					
18	V211-260-801-60	BOLT,SEMS (S) M8X16	*	2					
19	1716-120-200-00	COVER/CLUTCH/18 COMP	*	1					
20	1717-120-230-10	DISK/CLUTCH/184 COMP	*	1					
21	V211-260-802-00	BOLT/S	*	6					
22	1682-120-001-00	SHAFT/INPUT	*	1					
23	1435-120-002-30	COUPLING/16X27X62	*	1					
24	V580-140-602-80	PIN,SPRING/6 X28 W	*	2					
25		WIRE	*	1					

FIG. 9 PEDAL (CLUTCH) SYSTEM

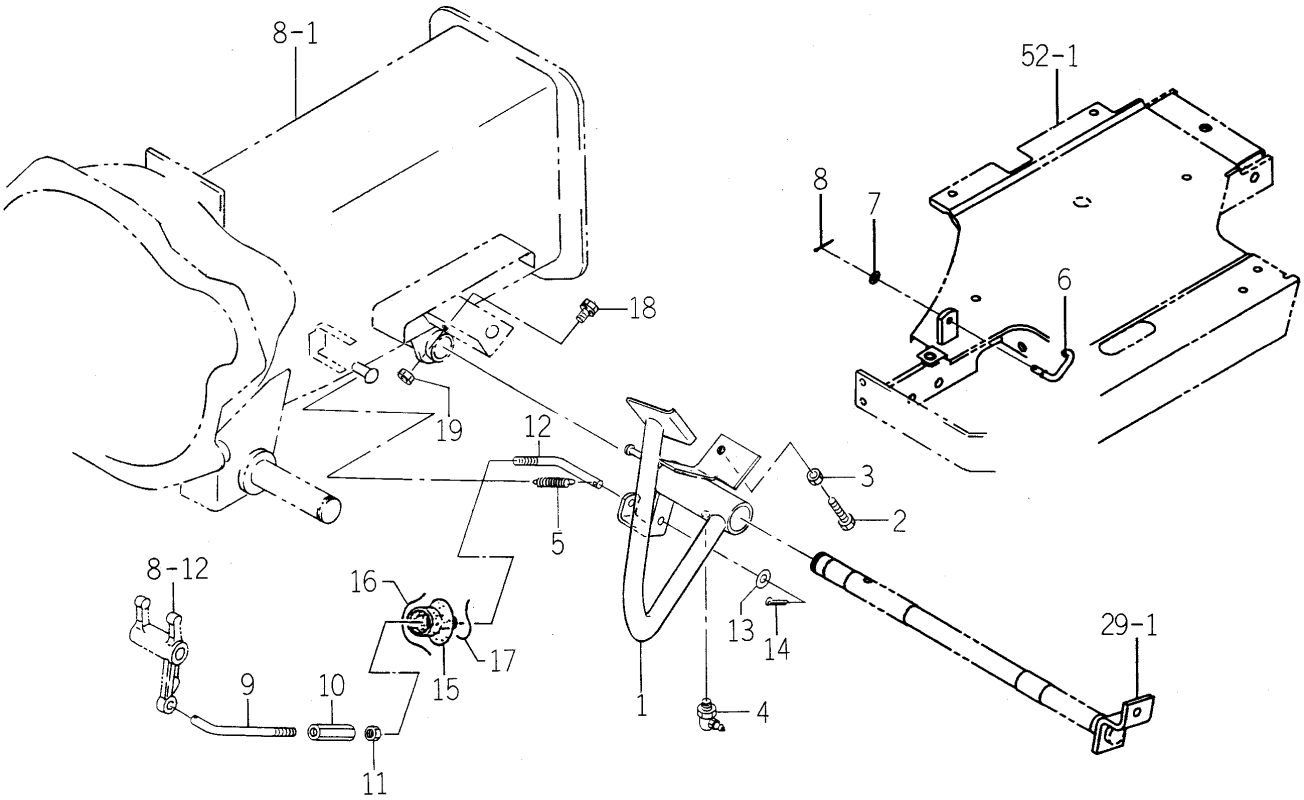

1738-122 -0100

KEY	PART CODE	DESCRIPTION	SPC	TYPE OF MODEL TM3160		ITC	COL	GRP	REMARKS
1	1738-122-200-20	PEDAL/CLUTCH COMP	*	1					
2	V201-260-803-50	BOLT/M 8X35	*	1					
3	V304-260-008-00	NUT	*	1					
4	V763-150-000-00	NIPPLE,GREASE/PT1/8	*	1					
5	1105-106-001-00	SPRING/HC094	*	1					
6	1675-135-001-00	HOOK	*	1					
7	V411-260-006-00	WASHER / M6	*	1					
8	V500-162-002-00	PIN,SPLIT/2 X20	*	1					
9	1434-122-007-00	ROD,CLUTCH (A)	*	1					
10	1421-122-003-00	TURNBUCKLE	*	1					
11	V304-260-008-00	NUT	*	1					
12	1672-122-001-20	ROD/CLUTCH/B	*	1					
13	V411-260-008-00	WASHER,PL/M 8	*	2					
14	V500-163-001-50	PIN,SPLIT/3 X15	*	2					
15	1434-122-005-00	BOOT	*	1					
16		WIRE	*	1					
17		WIRE	*	1					
18	V211-260-801-60	BOLT,SEMS (S) M8X16	*	1					
19	V304-260-008-00	NUT	*	1					

FIG. 10 CASE (TRANSMISSION) SYSTEM

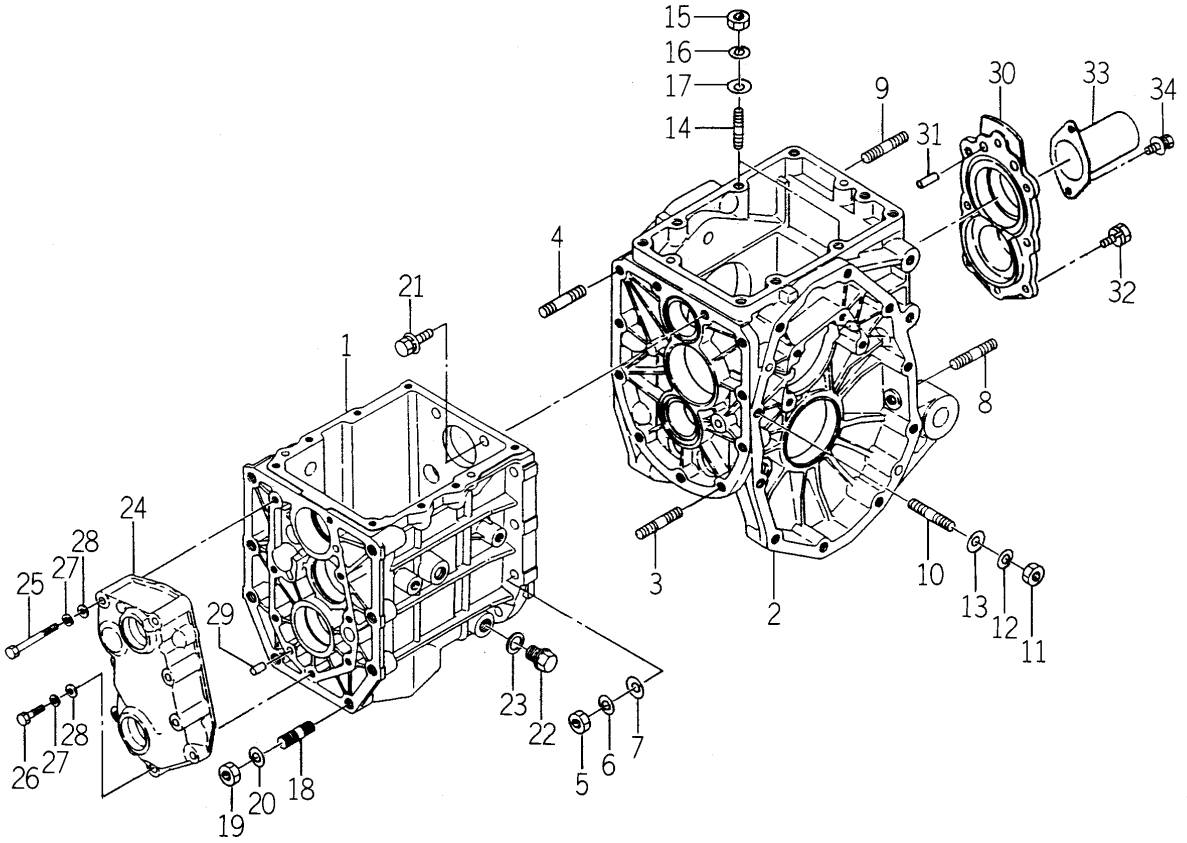

1738-201 -0100

KEY	PART CODE	DESCRIPTION	SPC	TYPE OF MODEL TM3160		ITC	COL	GRP	REMARKS
1	1682-201-001-10	CASE/TRANSMISSION/F	*	1					
2	1688-201-055-10	CASE/TRANSMISSION/RE	*	1					
3	V252-341-003-00	BOLT/STUD	*	2					
4	V252-341-003-50	BOLT/M10X35	*	7					
5	V304-260-010-00	NUT	*	9					
6	V401-160-010-00	WASHER,SP/M10	*	9					
7	V411-260-010-00	WASHER/M10	*	9					
8	V251-261-202-5D	BOLT/STUD/SEAL	*	2					
9	V252-341-202-50	BOLT/STUD	*	4					
10	V252-261-005-50	BOLT/M10X55	*	4					
11	V304-260-010-00	NUT	*	4					
12	V401-160-010-00	WASHER,SP/M10	*	4					
13	V411-260-010-00	WASHER/M10	*	4					
14	V252-341-003-00	BOLT/STUD	*	2					
15	V304-260-010-00	NUT	*	2					
16	V401-160-010-00	WASHER,SP/M10	*	2					
17	V411-260-010-00	WASHER/M10	*	2					
18	V252-341-203-00	BOLT/M12X30	*	8					
19	V304-460-012-00	NUT/M12	*	8					
20	V401-160-012-00	WASHER,SP/M12	*	8					
21	V211-361-003-50	BOLT/M10X35	*	2					
22	1427-201-007-00	PLUG,DRAIN	*	1					
23	1427-201-008-00	WASHER,SEAL/16	*	1					
24	1427-201-005-00	METAL/INPUT	*	1					
25	V201-260-806-00	BOLT/M 8X60	*	4					
26	V201-260-803-50	BOLT/M 8X35	*	4					
27	V401-160-008-00	WASHER,SP/M 8	*	8					
28	V411-260-008-00	WASHER,PL/M 8	*	8					
29	V522-100-801-80	PIN	*	2					
30	1688-201-056-00	METAL/PTO	*	1					

FIG. 10 CASE (TRANSMISSION) SYSTEM

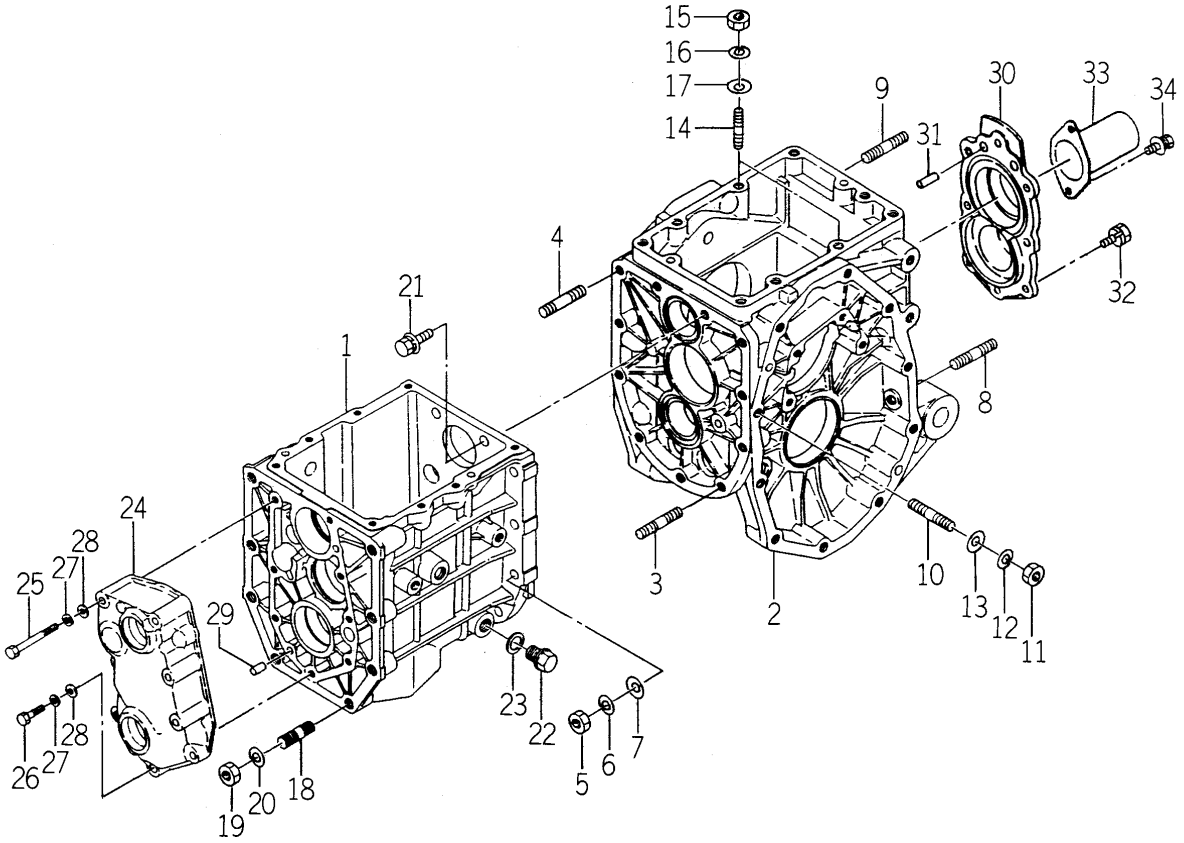

1738-201 -0100

KEY	PART CODE	DESCRIPTION	SPC	TYPE OF MODEL TM3160		ITC	COL	GRP	REMARKS
31	V523-101-002-40	PIN	*	2					
32	V211-260-802-50	BOLT/S	*	8					
33	1444-314-009-10	CAP,PTO SHAFT	*	1					
34	V210-360-601-60	BOLT(SP)/M6X16	*	2					

FIG. 11 GEAR (INPUT) SYSTEM

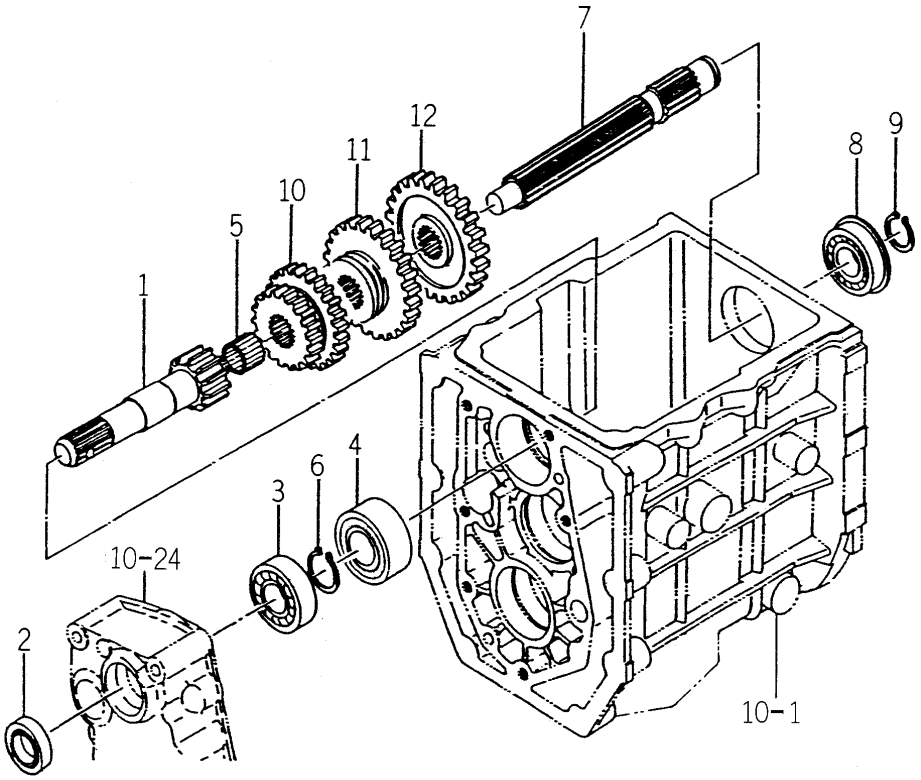

1682-202 -0100

KEY	PART CODE	DESCRIPTION	SPC	TYPE OF MODEL TM3160		ITC	COL	GRP	REMARKS
1	1682-202-001-00	GEAR/SPUR/15	*	1					
2	V744-120-350-70	SEAL,OIL/TC20357	*	1					
3	V600-110-620-40	BEARING,RB/6204	*	1					
4	1600-202-005-00	BEARING/BALL	*	1					
5	V654-416-201-70	BEARING,NR/KT162017	*	1					
6	V704-140-025-00	RING,SNAP/25 C	*	1					
7	1672-202-002-20	SHAFT/CHANGE	*	1					
8	V607-110-620-40	BEARING,RB/6204NR	*	1					
9	V704-140-020-00	RING,SNAP/20C	*	1					
10	1682-202-002-00	GEAR/SPUR/19-25	*	1					
11	1682-202-003-00	GEAR/SPUR/32	*	1					
12	1682-202-004-00	GEAR/SPUR/14-33	*	1					

FIG. 12 PINION (DRIVE) SYSYTEM

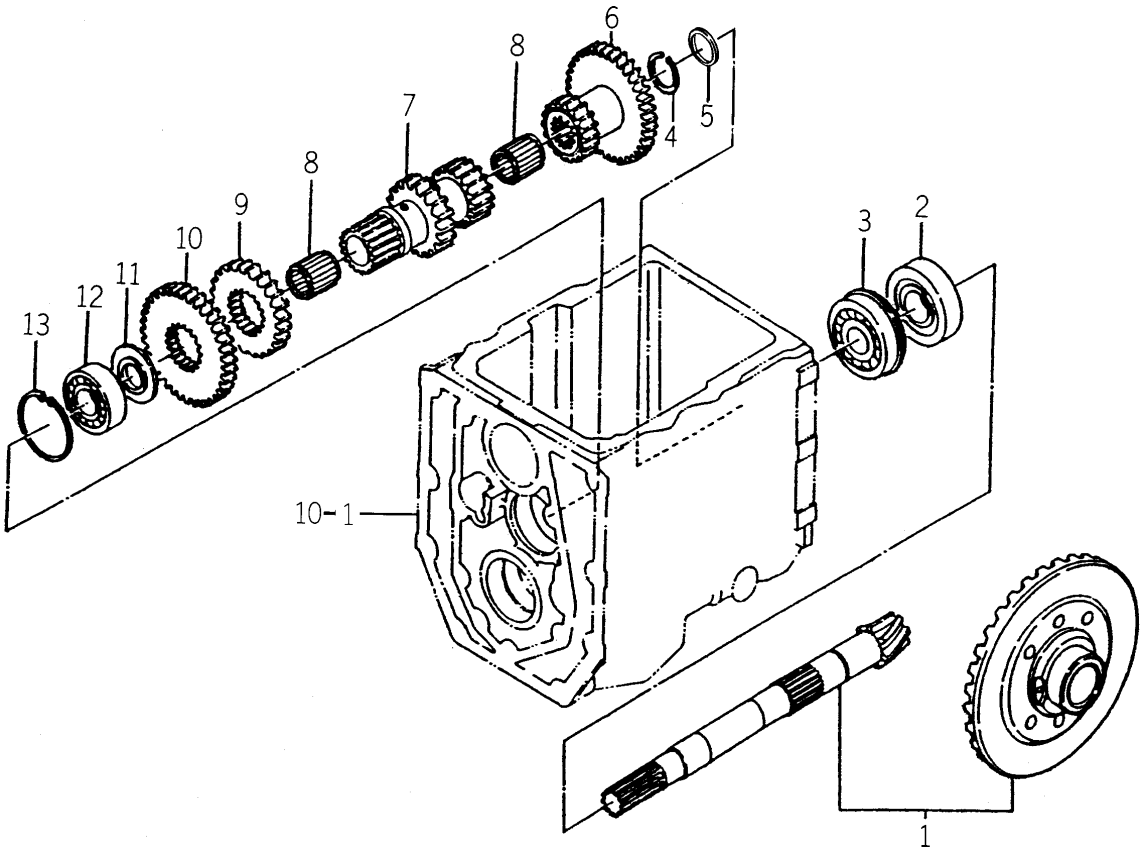

1682-203 -0100

KEY	PART CODE	DESCRIPTION	SPC	TYPE OF MODEL TM3160		ITC	COL	GRP	REMARKS
1	1684-203-200-40	PINION/BEVEL SET	*	1					
2	1594-218-001-00	BEARING/BALL 6305SH2	*	1					
3	1491-203-006-10	BEARING	*	1					
4	1427-203-002-00	RING,SNAP/25	*	1					
5	1507-216-004-10	COLLAR/25X32X3	*	1					
6	1682-203-003-10	GEAR/SPUR/16-34	*	1					
7	1682-203-001-00	GEAR/SPUR/17-24	*	1					
8	1600-203-006-00	BEARING,NEEDLE	*	2					
9	1682-203-002-00	GEAR/SPUR/30	*	1					
10	1682-203-004-00	GEAR/SPUR/33	*	1					
11	1434-203-002-00	COLLAR,THRUST	*	1					
12	V600-110-630-40	BEARING,RB/6304	*	1					
13	V705-140-052-00	RING,SNAP/52 C	*	1					

FIG. 13 GEAR (REVERSE) SYSTEM

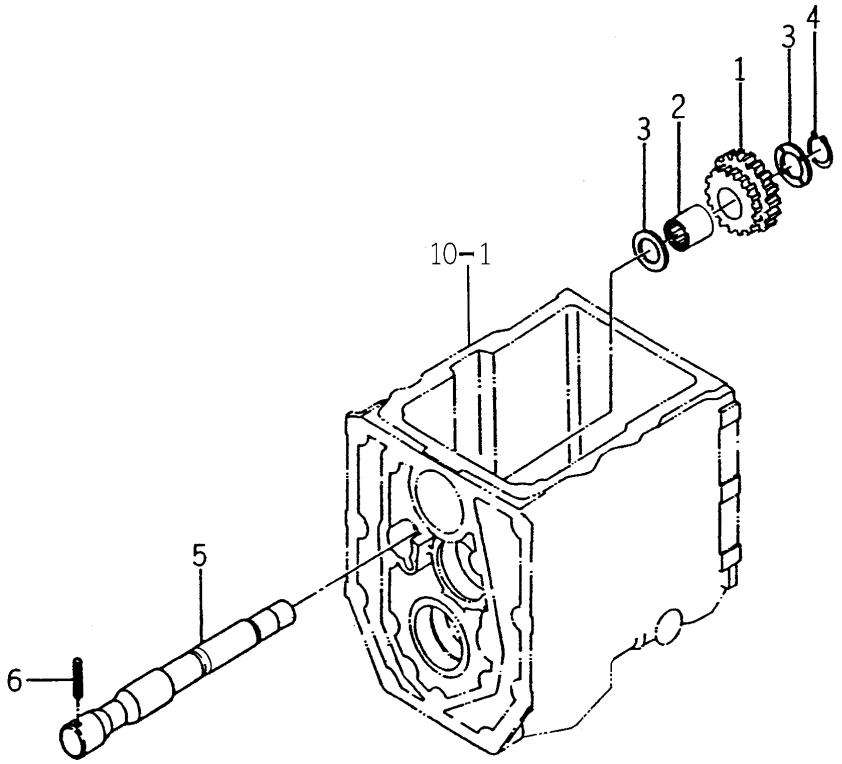

1682-204 -0100

KEY	PART CODE	DESCRIPTION	SPC	TYPE OF MODEL TM3160		ITC	COL	GRP	REMARKS
1	1682-204-001-00	GEAR/SPUR/20-23	*	1					
2	V653-622-282-00	BEARING,NR/TLA222820	*	1					
3	1427-204-003-10	COLLAR/22X34X2	*	2					
4	V704-140-022-00	RING,SNAP/22 C	*	1					
5	1491-204-002-10	PIN,BACK GEAR	*	1					
6	V580-140-601-60	PIN SPLIT W 6.0X16	*	1					

FIG. 14 GEAR (4WD) SYSTEM

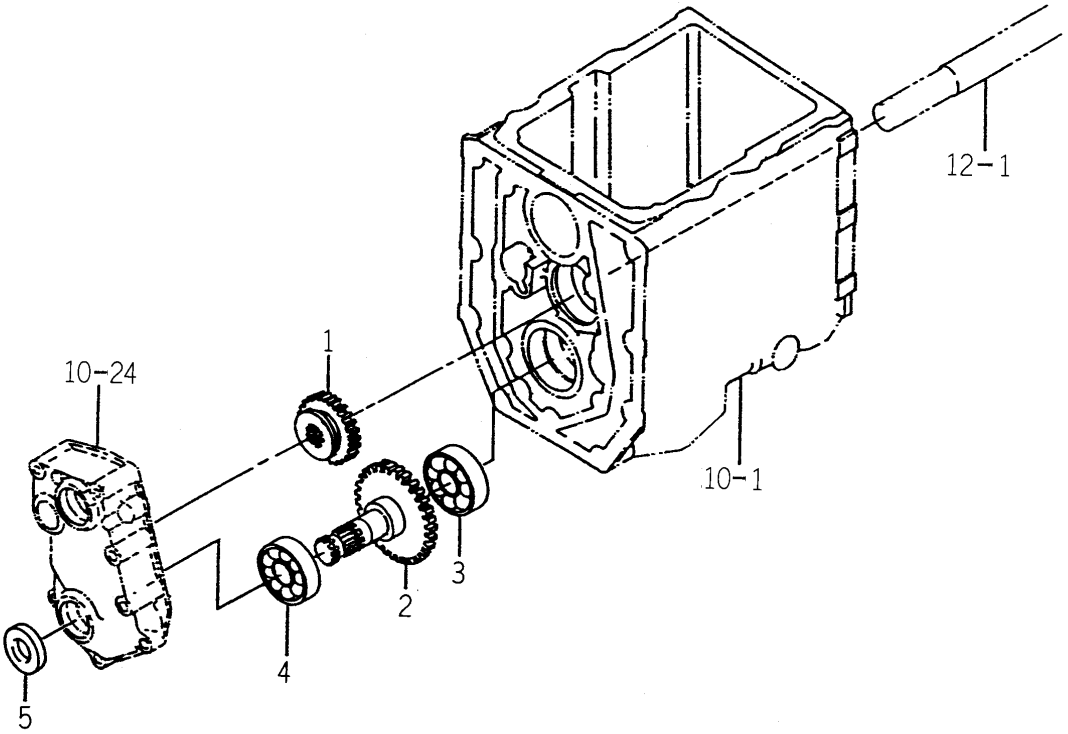

1738-205 -0100

KEY	PART CODE	DESCRIPTION	SPC	TYPE OF MODEL TM3160		ITC	COL	GRP	REMARKS
1	1682-205-001-00	GEAR/SPUR/20	*	1					
2	1738-205-200-00	SHAFT/FRONT COMP	*	1					
3	V600-110-630-40	BEARING,RB/6304	*	1					
4	V600-110-620-40	BEARING,RB/6204	*	1					
5	V744-120-350-70	SEAL,OIL/TC20357	*	1					

FIG. 15 LEVER (MAIN) SYSTEM

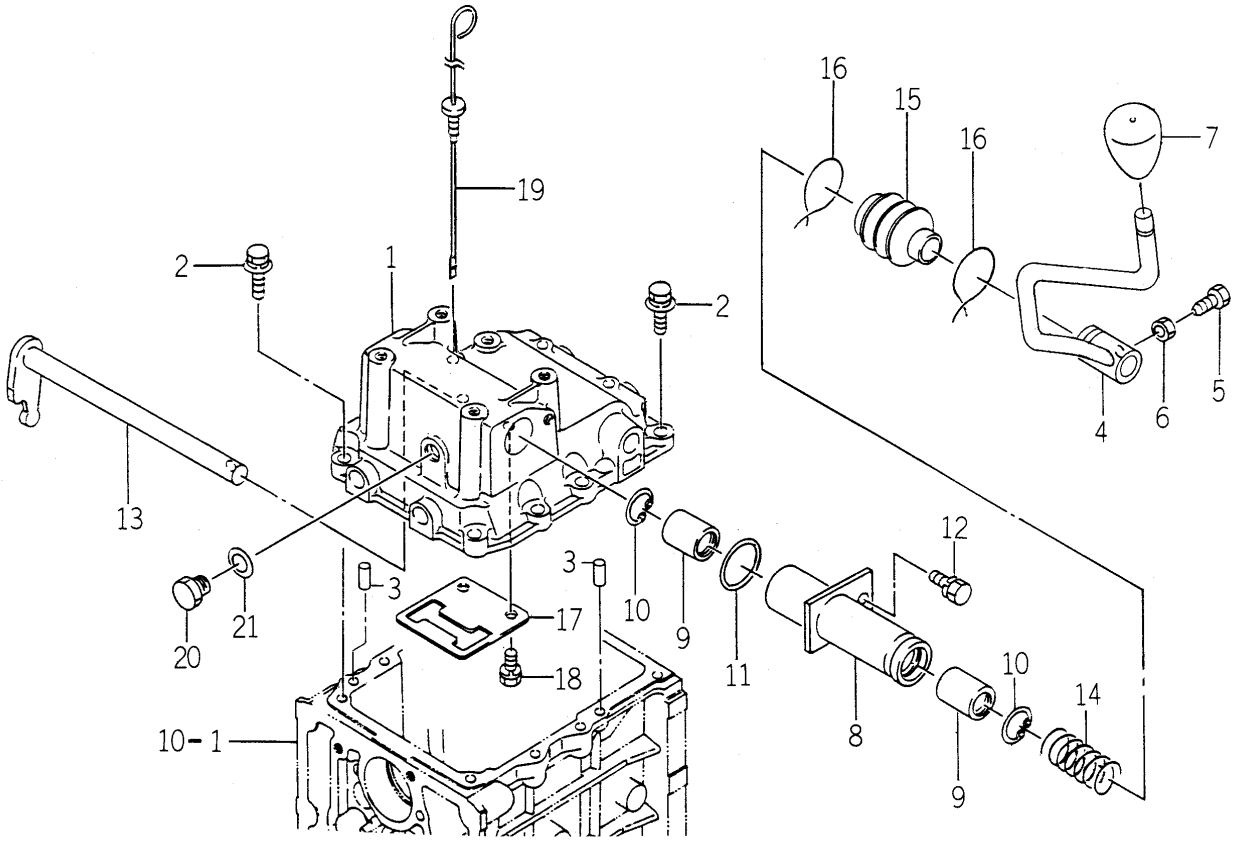

1738-207 -0100,1672-207A-0100

KEY	PART CODE	DESCRIPTION	SPC	TYPE OF MODEL TM3160		ITC	COL	GRP	REMARKS
1	1672-207-001-10	METAL/SHIFT	*	1					
2	V211-360-803-00	BOLT/SP	*	8					
3	V522-100-801-80	PIN	*	2					
4	1738-207-200-10	LEVER/MAIN COMP	*	1					
5	1600-502-003-00	BOLT,SM/M08X25	*	1					
6	V304-260-008-00	NUT	*	1					
7	1636-271-013-00	GRIP/12X50	*	1					
8	1672-207-240-00	TUBE/SHIFT/MAIN COMP	*	1					
9	1544-215-015-00	BEARING	*	2					
10	V705-140-028-00	RING,SNAP/28 C	*	2					
11	V723-102-003-00	O-RING	*	1					
12	V211-260-802-00	BOLT/S	*	1					
13	1672-207-230-00	ARM/SHIFT/MAIN COMP	*	1					
14	1614-215-006-00	SPRING/HC060	*	1					
15	1544-215-016-00	BOOT,CHANGE	*	1					
16		WIRE	*	2					
17	1672-207-002-10	PLATE/GUIDE	*	1					
18	V211-560-802-00	BOLT/M8X20	*	2					
19	1614-501-006-00	GAUGE/OIL	*	1					
20	1564-667-002-00	BLOT/M14X10	*	1					
21	1488-541-021-00	SHIM/T=0.7	*	1					

FIG. 16 LEVER (SUB) SYSTEM

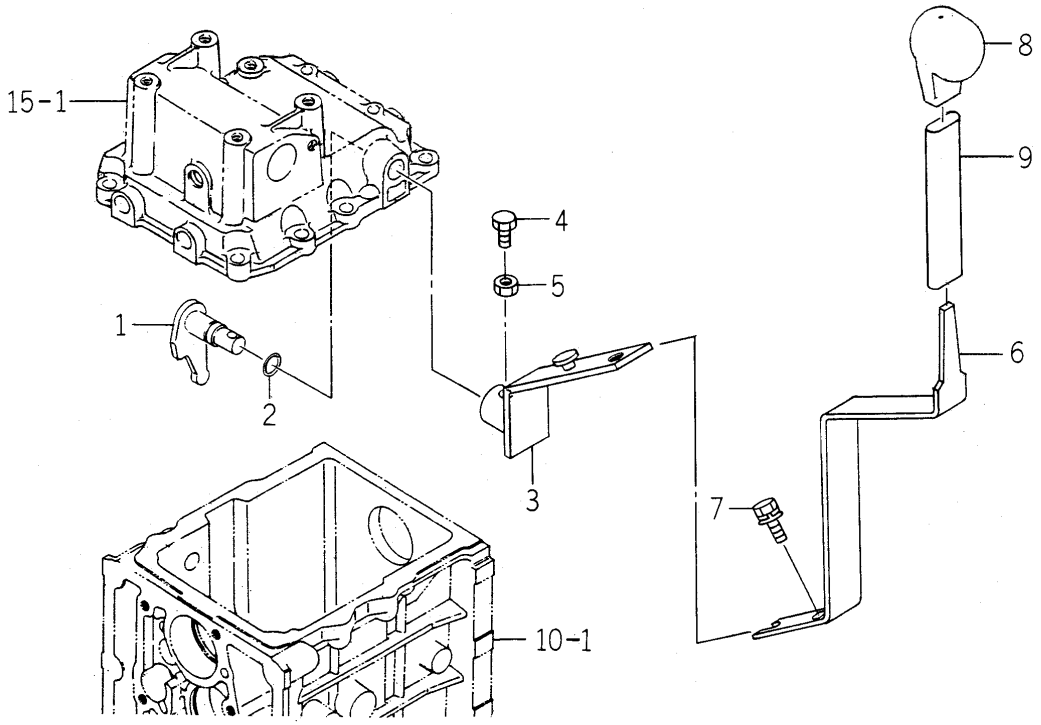

1750-208 -0100

KEY	PART CODE	DESCRIPTION	SPC	TYPE OF MODEL TM3160		ITC	COL	GRP	REMARKS
1	1672-208-200-20	ARM/SHIFT/SUB COMP	*	1					
2	V723-101-501-40	RING/O	*	1					
3	1750-208-200-00	ARM/SUB COMP	*	1					
4	1600-502-003-00	BOLT,SM/M08X25	*	1					
5	V304-260-008-00	NUT	*	1					
6	1750-208-001-10	LEVER/SUB	*	1					
7	V211-361-002-00	BOLT,SEMS	*	1					
8	1703-261-002-00	GRIP/MAIN	*	1					
9	1725-266-001-00	INSULATOR/120	*	1					

FIG. 17 CHANGE (4WD) SYSTEM

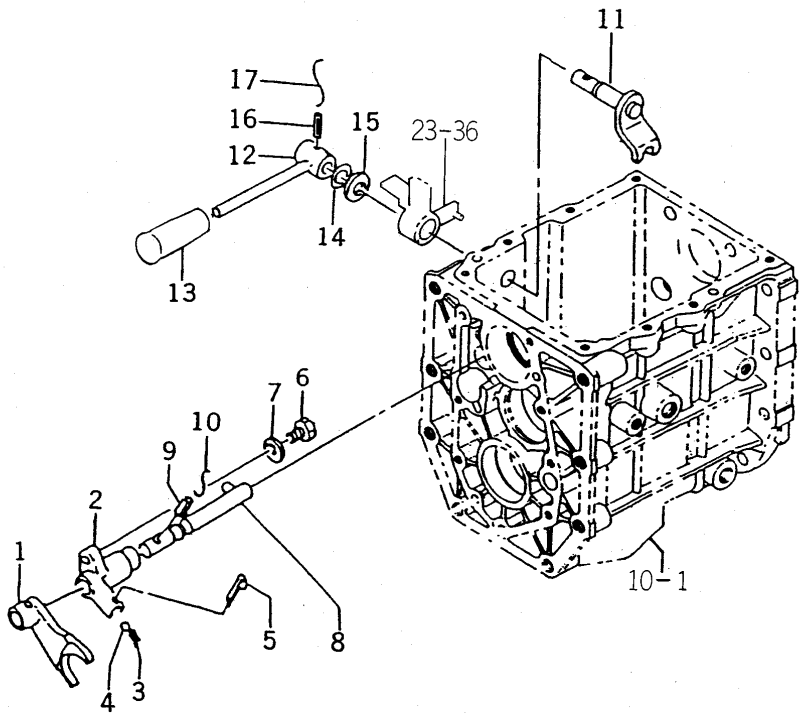

1738-209 -0100

KEY	PART CODE	DESCRIPTION	SPC	TYPE OF MODEL TM3160		ITC	COL	GRP	REMARKS
1	1427-210-008-10	FORK/SHIFT/FRONT	*	1					
2	1427-210-009-00	CASE,SPRING	*	1					
3	1302-225-003-00	SPRING,SHIFTER	*	1					
4	V682-200-001-00	BALL	*	1					
5	V500-162-002-00	PIN,SPLIT/2 X20	*	1					
6	1427-210-011-00	BOLT/M8X30	*	1					
7	V411-260-008-00	WASHER,PL/M 8	*	1					
8	1427-210-200-00	STAY,SHIFTER	*	1					
9	V580-140-502-00	PIN,SPRING/5 X20 W	*	1					
10		WIRE	*	1					
11	1427-209-200-00	ARM,SHIFT	*	1					
12	1682-209-200-20	LEVER/4WD COMP	*	1					
13	2173-820-003-00	GRIP/ORANGE/10.5	*	1					
14	V720-102-401-40	O-RING/P14	*	1					
15	1427-601-003-00	WASHER/15X24X2	*	1					
16	V580-140-503-20	PIN,SPRING/5 X32 W	*	1					
17		WIRE	*	1					

FIG. 18 CHANGE (MAIN/SUB) SYSTEM

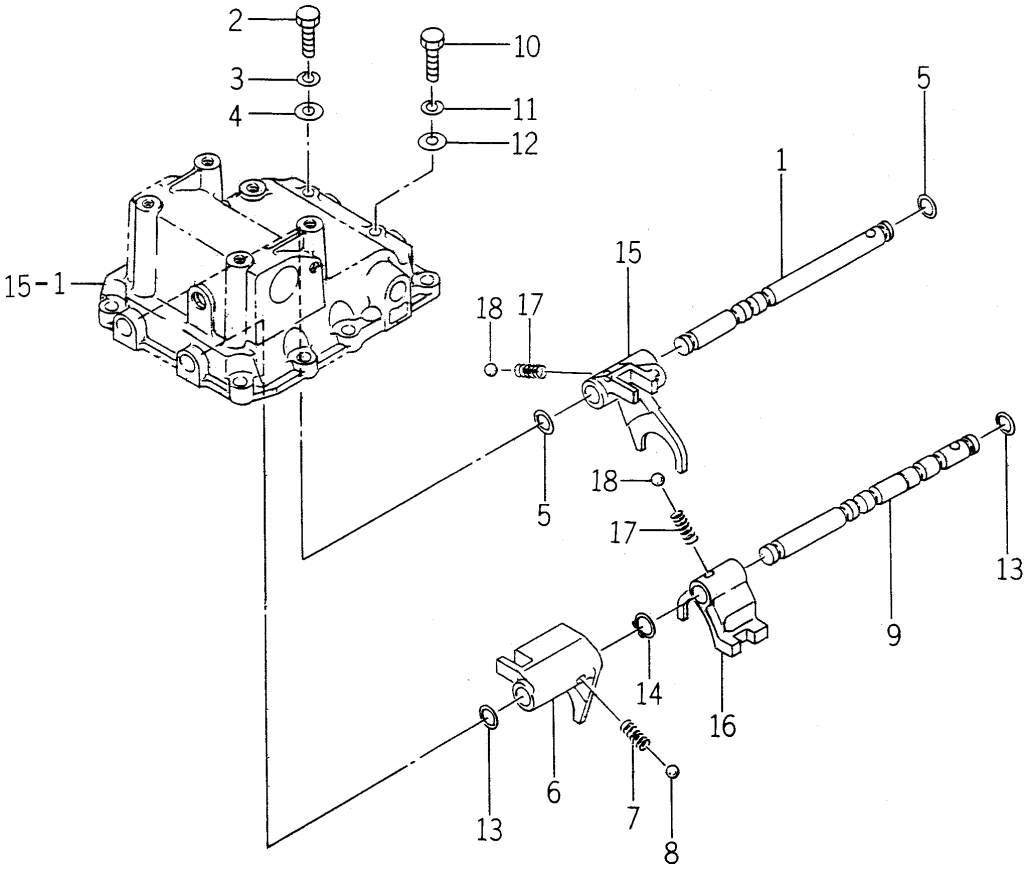

1682-210 -0100

KEY	PART CODE	DESCRIPTION	SPC	TYPE OF MODEL TM3160		ITC	COL	GRP	REMARKS
1	1672-210-001-00	STAY/SHIFT/1ST	*	1					
2	1427-210-003-00	BOLT/M8X25	*	1					
3	V401-160-008-00	WASHER,SP/M 8	*	1					
4	V411-260-008-00	WASHER,PL/M 8	*	1					
5	V720-102-401-00	O-RING/P10A	*	2					
6	1672-210-002-00	FORK/SHIFT/1ST	*	1					
7	1650-259-010-00	SPRING/HC023	*	1					
8	V682-200-001-00	BALL	*	1					
9	1672-210-003-10	STAY/SHIFT/2ND	*	1					
10	1427-210-003-00	BOLT/M8X25	*	1					
11	V401-160-008-00	WASHER,SP/M 8	*	1					
12	V411-260-008-00	WASHER,PL/M 8	*	1					
13	V720-102-401-00	O-RING/P10A	*	2					
14	V704-140-014-00	RING,SNAP/14 C	*	1					
15	1672-210-004-00	FORK/SHIFT/2ND	*	1					
16	1672-210-005-00	FORK/SHIFT/SUB	*	1					
17	1650-259-010-00	SPRING/HC023	*	2					
18	V682-200-001-00	BALL	*	2					

FIG. 19 GEAR (PTO) SYSTEM

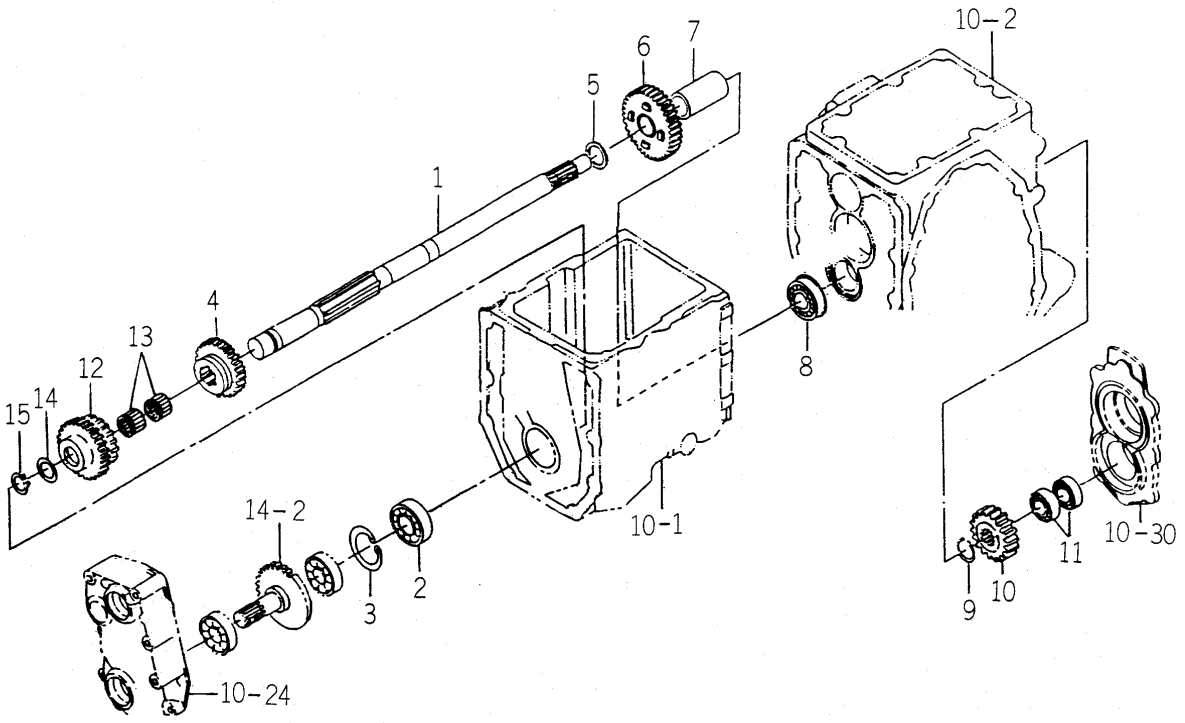

1738-211 -0100

KEY	PART CODE	DESCRIPTION	SPC	TYPE OF MODEL TM3160		ITC	COL	GRP	REMARKS
1	1682-211-004-20	SHAFT/DRIVE/PTO	*	1					
2	V600-110-630-40	BEARING,RB/6304	*	1					
3	V705-140-052-00	RING,SNAP/52 C	*	1					
4	1682-211-008-00	CLUTCH	*	1					
5	1434-211-004-00	COLLAR/26X36X3	*	1					
6	1682-211-210-00	GEAR/SPUR/33 COMP	*	1					
7	1491-211-003-00	PIPE/63	*	1					
8	V607-110-620-50	BEARING,RB/6205NR	*	1					
9	V704-140-025-00	RING,SNAP/25 C	*	1					
10	1672-211-009-10	GEAR/SPUR/19	*	1					
11	V600-110-620-40	BEARING,RB/6204	*	2					
12	1684-211-003-10	GEAR/SPUR/18-20	*	1					
13	1682-211-007-00	BEARING/NEEDLE	*	2					
14	1682-211-002-20	WASHER/20X32X02	*	3					
15	V704-140-020-00	RING,SNAP/20C	*	1					

FIG. 20 SHAFT (PTO) SYSTEM

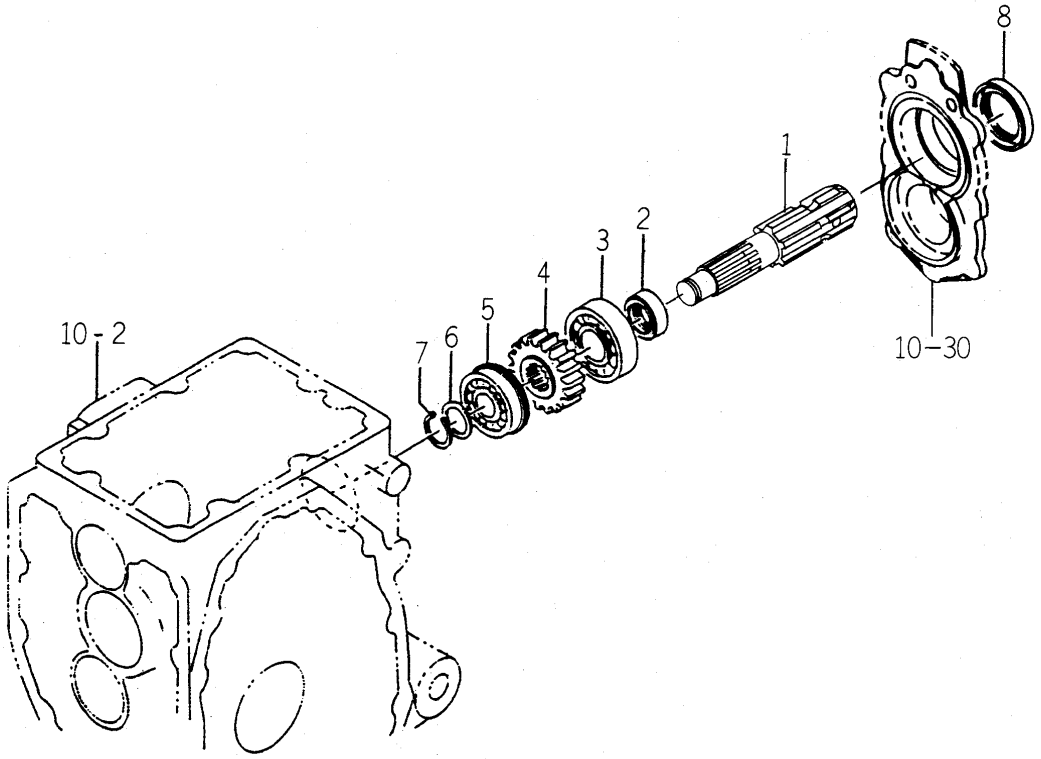

1738-212 -0100

KEY	PART CODE	DESCRIPTION	SPC	TYPE OF MODEL TM3160		ITC	COL	GRP	REMARKS
1	1738-212-002-00	SHAFT/PTO	*	1					
2	1427-212-003-20	SLEEVE	*	1					
3	1594-218-001-00	BEARING/BALL 6305SH2	*	1					
4	1672-212-002-10	GEAR/SPUR/19	*	1					
5	V607-110-630-40	BEARING,RB/6304NR	*	1					
6	1427-212-002-00	WASHER/20X28X2	*	1					
7	V704-140-020-00	RING,SNAP/20C	*	1					
8	V744-135-550-80	SEAL,OIL/TC35558	*	1					

FIG. 21 LEVER (PTO) SYSTEM

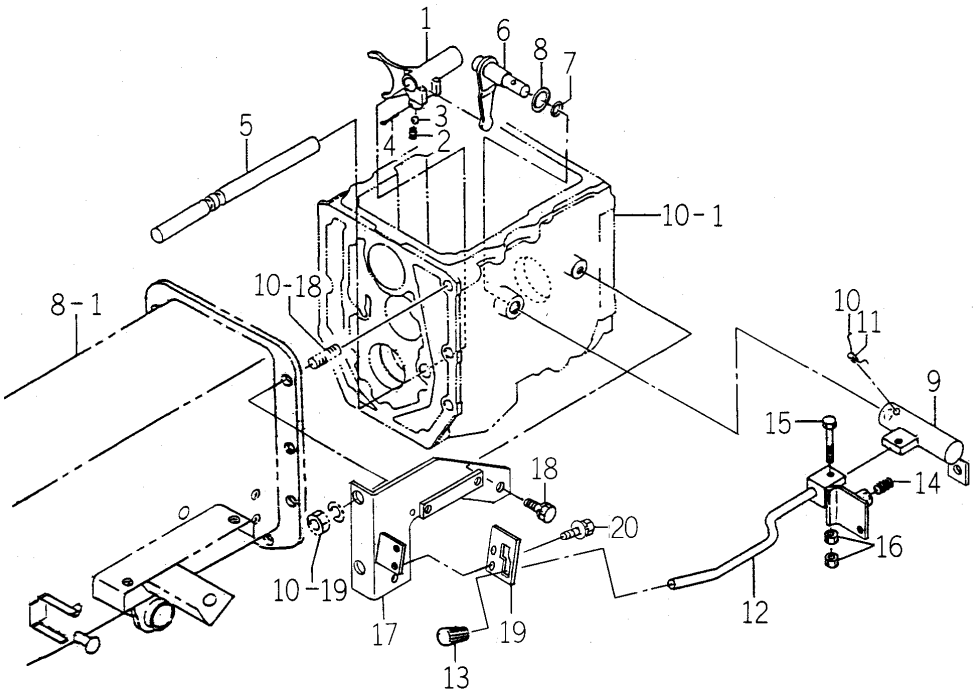

1738-216 -0100

KEY	PART CODE	DESCRIPTION	SPC	TYPE OF MODEL TM3160		ITC	COL	GRP	REMARKS
1	1682-216-006-00	SHIFTER/PTO	*	1					
2	1302-225-003-00	SPRING,SHIFTER	*	1					
3	V682-200-001-00	BALL	*	1					
4	V500-162-502-50	PIN,SPLIT/2.5X25	*	1					
5	1682-216-002-10	STAY/SHIFT/PTO	*	1					
6	1672-216-310-00	ARM/SHIFT/PTO COMP	*	1					
7	V720-102-401-40	O-RING/P14	*	1					
8	1427-601-003-00	WASHER/15X24X2	*	1					
9	1682-216-270-10	ARM/PTO COMP	*	1					
10		WIRE	*	1					
11	V580-140-502-50	PIN,SPRING/5 X25 W	*	1					
12	1682-216-260-10	LEVER/PTO COMP	*	1					
13	3640-585-001-00	GLIP/YELLOW	*	1					
14	2149-601-031-00	SPRING/HC024	*	1					
15	1682-216-007-10	BOLT/M8X45	*	1					
16	V304-460-008-00	NUT/M8	*	2					
17	1738-216-220-00	STAY/PTO/PARKIN COMP	*	1					
18	V211-261-002-00	BOLT,SEMS	*	1					
19	1738-216-003-00	GUIDE/CHANGE	*	1					
20	V210-360-601-60	BOLT(SP)/M6X16	*	2					

FIG. 22 SHIELD COVER SYSTEM

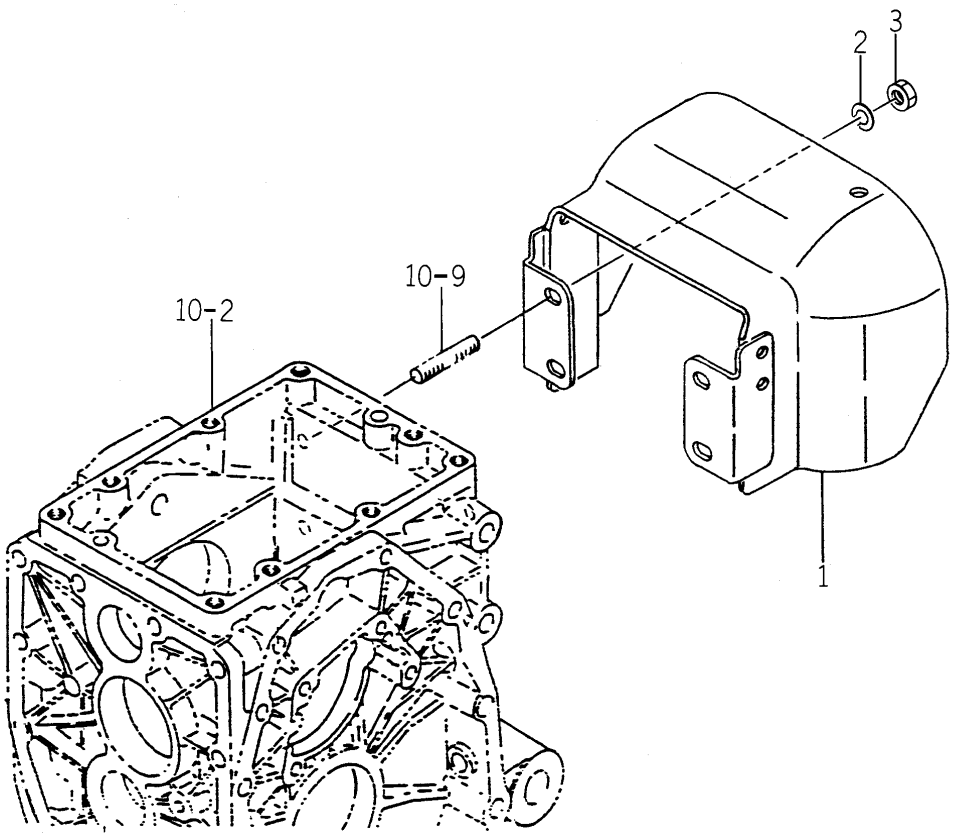

1738-218 -0100

KEY	PART CODE	DESCRIPTION	SPC	TYPE OF MODEL TM3160		ITC	COL	GRP	REMARKS
1	1738-218-200-00	COVER/SHIELD COMP	*	1					
2	V401-160-012-00	WASHER,SP/M12	*	4					
3	V304-460-012-00	NUT/M12	*	4					

FIG. 23 MID PTO SYSTEM(1/2)

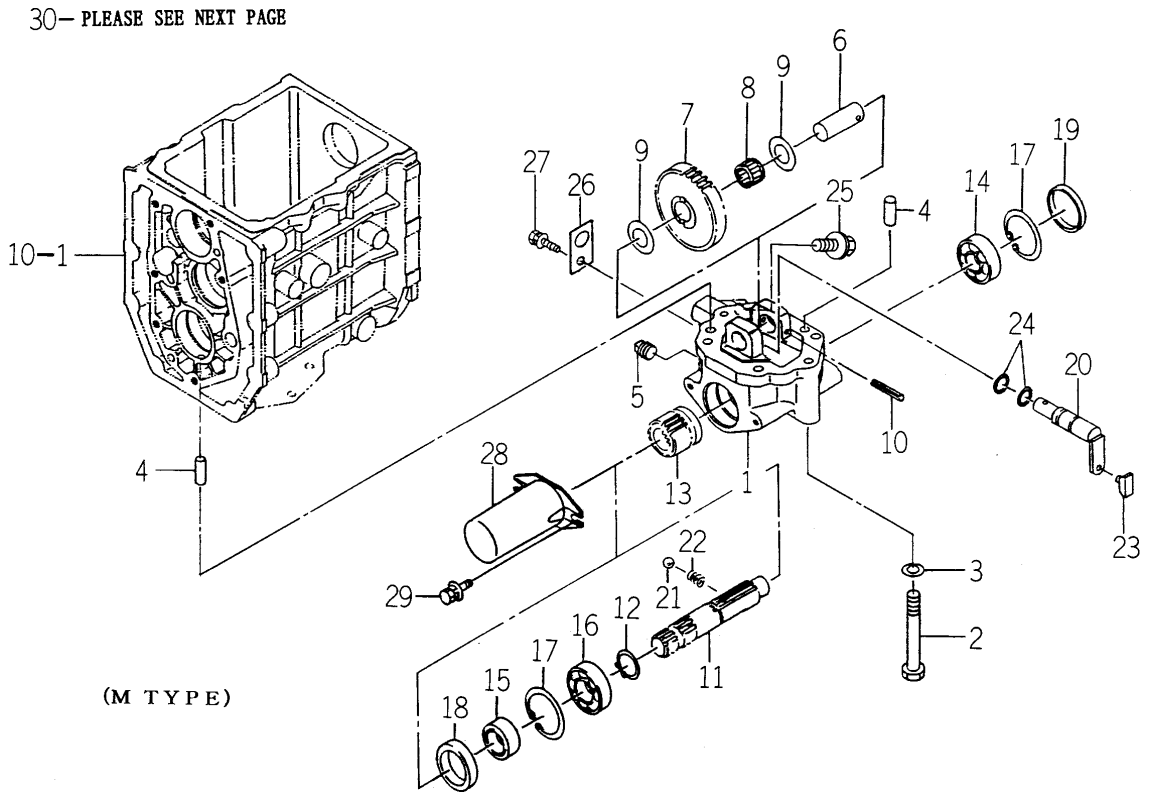

1738-255 -0100,1682-255A-0100

KEY	PART CODE	DESCRIPTION	SPC	TYPE OF MODEL TM3160		ITC	COL	GRP	REMARKS
1	1682-255-201-10	CASE/PTO/MID	*	1					
2	V201-361-009-00	BOLT/M10X90	*	6					
3	V401-160-010-00	WASHER,SP/M10	*	6					
4	V523-101-002-40	PIN	*	2					
5	V781-160-000-6B	PLUG/SCREW/SEAL	*	1					
6	1682-255-203-00	PIN/20X51	*	1					
7	1682-255-202-00	GEAR/SPUR/34	*	1					
8	1682-255-002-20	BEARING/NEEDLE	*	1					
9	1480-212-003-00	COLLAR/21X36X1	*	2					
10	V580-140-604-00	PIN,SPRING/6 X40 W	*	1					
11	1682-255-204-00	SHAFT/PTO/MID	*	1					
12	V704-140-025-00	RING,SNAP/25 C	*	1					
13	1682-255-205-10	GEAR/SPUR/15	*	1					
14	V600-110-630-40	BEARING,RB/6304	*	1					
15	1427-212-003-20	SLEEVE	*	1					
16	V600-110-620-50	BEARING,RB/6205	*	1					
17	V705-140-052-00	RING,SNAP/52 C	*	2					
18	V744-135-520-80	SEAL,OIL/TC35528	*	1					
19	3625-701-003-00	CAP,BLANK/52	*	1					
20	1682-255-210-40	ARM/SHIFT/MID COMP	*	1					
21	V682-200-001-00	BALL	*	1					
22	1302-225-003-00	SPRING,SHIFTER	*	1					
23	2703-101-020-00	COLLAR,SHIFTER	*	1					
24	V720-102-401-40	O-RING/P14	*	2					
25	V233-361-201-60	FLANGEBOLT	*	1					
26	1620-255-208-00	PLATE/I/30X50	*	1					
27	V211-360-801-60	BOLT,SEMS (SP)	*	1					
28	1444-314-009-10	CAP,PTO SHAFT	*	1					
29	V210-360-602-00	BOLT/SP	*	2					
30	1738-255-310-10	LEVER/PTO/MID COMP	*	1					

FIG. 23 MID PTO SYSTEM(2/2)

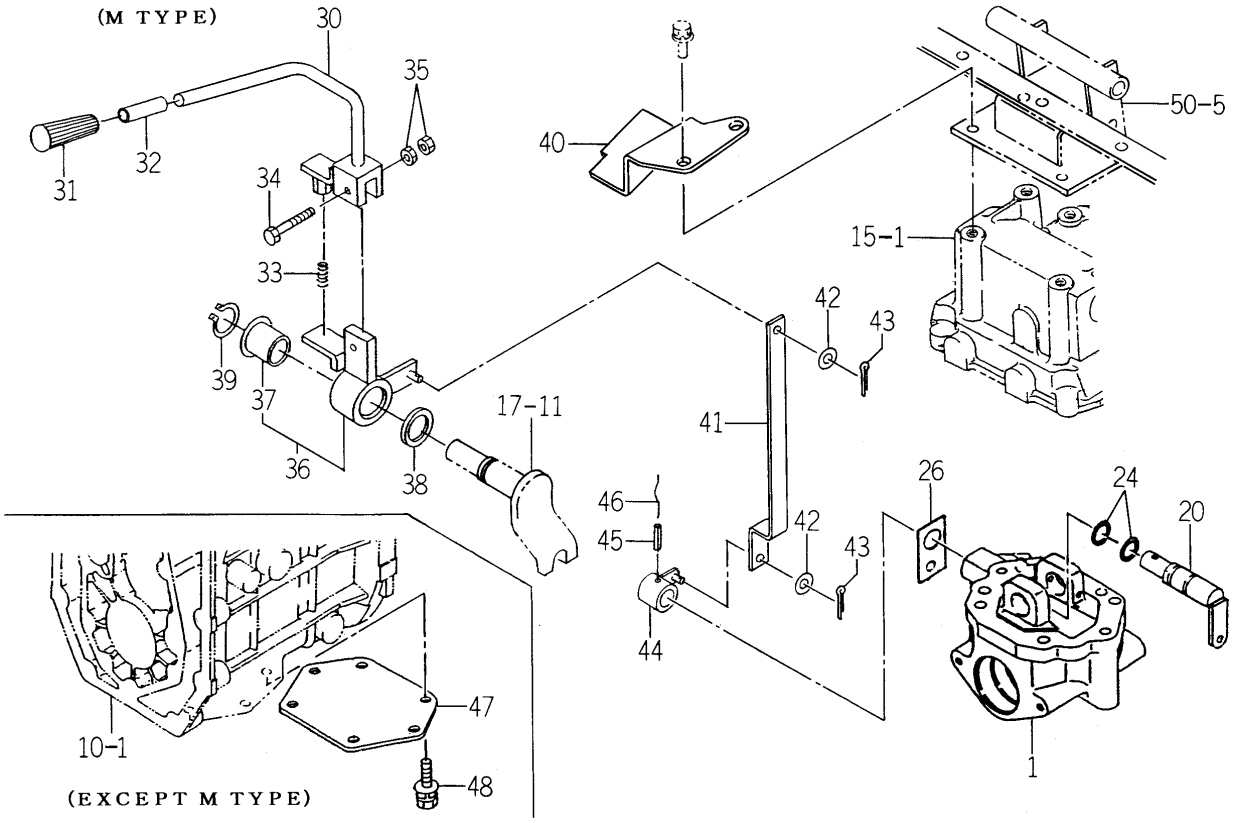

1738-255 -0100,1682-255A-0100

KEY	PART CODE	DESCRIPTION	SPC	TYPE OF MODEL TM3160		ITC	COL	GRP	REMARKS
31	3640-585-001-00	GLIP/YELLOW	*	1					
32	1682-255-303-00	TUBE/10X12X50	*	1					
33	2149-601-031-00	SPRING/HC024	*	1					
34	V200-360-604-00	BOLT	*	1					
35	V300-460-006-00	NUT/M 6	*	2					
36	1738-255-330-00	ARM/PTO/MID ASSY	*	1					
37	1581-521-642-00	BUSH/25X28X27	*	1					
38	3670-520-008-00	WASHER/25X34X02	*	1					
39	V704-140-025-00	RING,SNAP/25 C	*	1					
40	1738-255-002-00	GUIDE/PTO/MID	*	1					
41	1738-255-001-00	ROD/TIE/MID	*	1					
42	V411-260-008-00	WASHER,PL/M 8	*	2					
43	V500-162-001-50	PIN,SPLIT/2 X15	*	2					
44	1683-265-510-00	ARM/SHIFT/MID COMP	*	1					
45	V580-140-602-50	PIN,SPRING/6 X25 W	*	1					
46		WIRE	*	1					
47	1682-255-001-00	COVER/PLATE	*	1					
48	V211-361-002-50	BOLT/SP	*	6					

FIG. 24 DIFF CASE SYSTEM

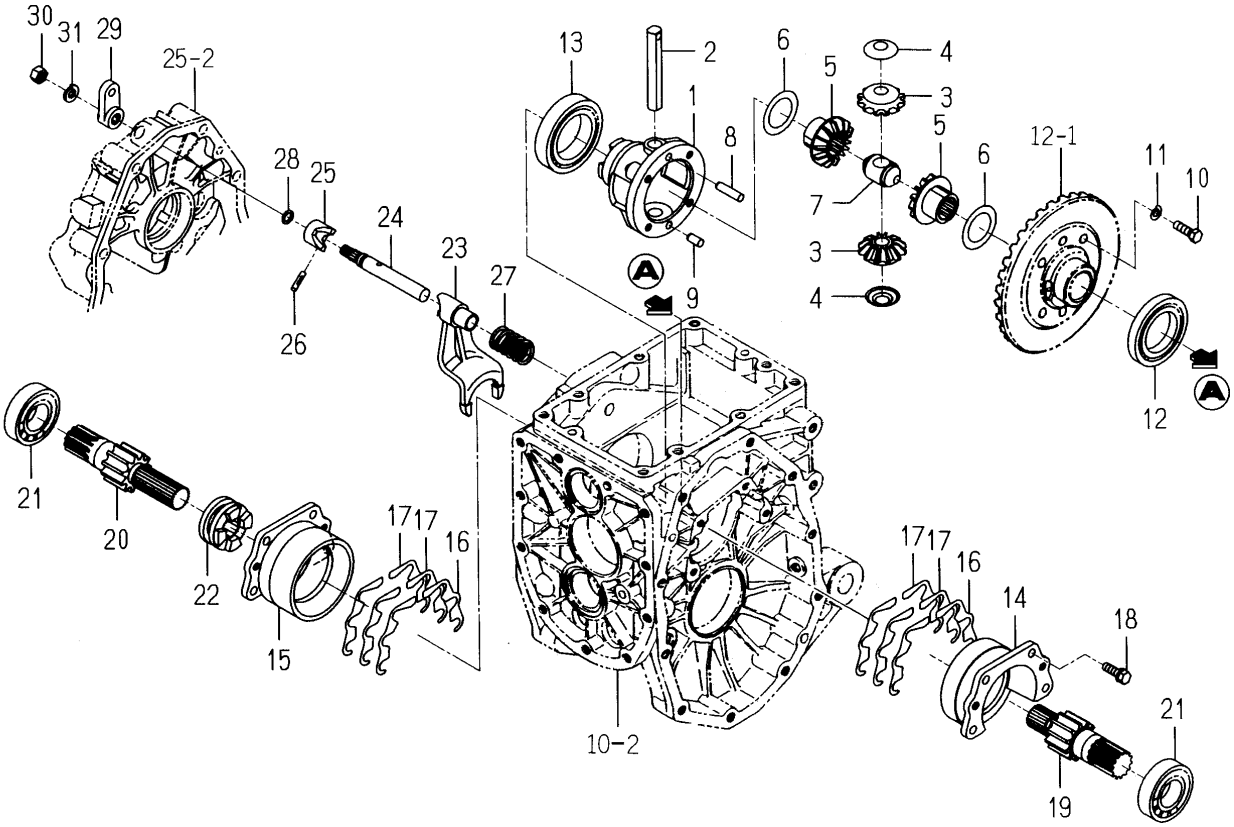

1717-304 -0100

KEY	PART CODE	DESCRIPTION	SPC	TYPE OF MODEL TM3160		ITC	COL	GRP	REMARKS
1	1427-301-002-20	CASE,DIFF	*	1					
2	1444-411-006-00	SHAFT,DIFF. PINION	*	1					
3	1672-301-003-00	PINION/BEVEL/12	*	2					
4	1427-301-005-00	COLLAR,PINION THRUST	*	2					
5	1672-301-004-00	GEAR/BEVEL/14	*	2					
6	1427-301-007-00	COLLAR,THRUST	*	2					
7	1427-301-009-00	HOLDER,PINION SHAFT	*	1					
8	1672-301-002-00	PIN	*	1					
9	V523-100-801-60	PIN	*	1					
10	1544-304-006-10	BOLT/M8X25	*	4					
11	V401-160-008-00	WASHER,SP/M 8	*	4					
12	V600-110-600-90	BEARING,RB/6009	*	1					
13	V600-110-601-00	BEARING,RB/6010	*	1					
14	1427-201-012-00	METAL,DIFF-CASE LH	*	1					
15	1427-201-013-00	METAL,DIFF-CASE RH	*	1					
16	1427-201-014-10	SHIM,DIFF-CASE A	*	8					
17	1427-201-015-10	SHIM,DIFF-CASE B	*	4					
18	V211-560-802-50	BOLT,SEMS/M8X25 7T	*	8					
19	1717-304-001-00	GEAR/SPUR/11/LH	*	1					
20	1717-304-002-00	GEAR/SPUR/11/RH	*	1					
21	V600-110-620-60	BEARING,RB/6206	*	2					
22	1427-301-013-20	CLUTCH/DIFFLOCK	*	1					
23	1427-301-014-10	FORK/SHIFT/DIFFLOCK	*	1					
24	1427-301-015-10	STAY,SHIFTER	*	1					
25	1427-301-016-00	CAM,DIFF-LOCK	*	1					
26	V530-240-502-40	PIN/SLITTED	*	1					
27	1427-301-018-00	SPRING,PRESS/40	*	1					
28	V720-102-401-00	O-RING/P10A	*	1					
29	1427-301-019-00	ARM/DIFFLOCK	*	1					
30	V304-260-010-00	NUT	*	1					

FIG. 24 DIFF CASE SYSTEM

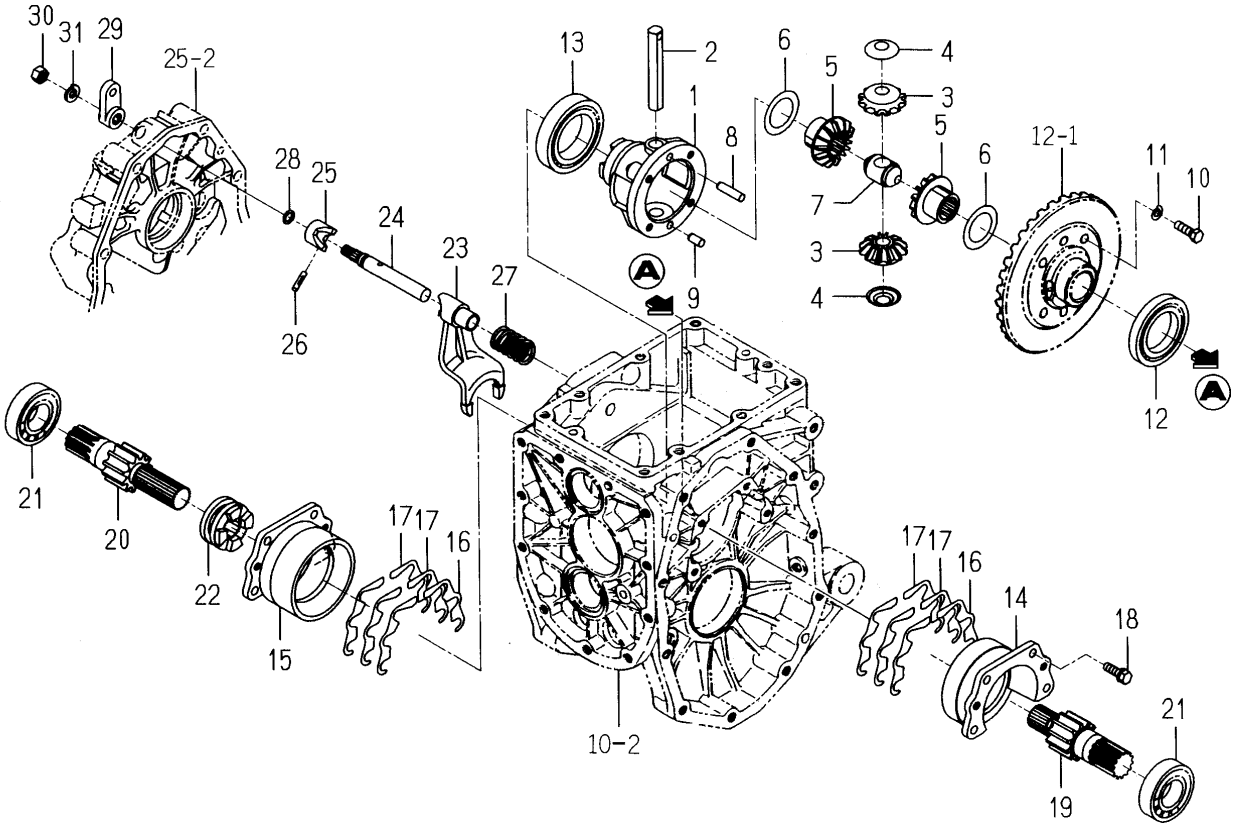

1717-304 -0100

KEY	PART CODE	DESCRIPTION	SPC	TYPE OF MODEL TM3160		ITC	COL	GRP	REMARKS
31	V401-160-010-00	WASHER,SP/M10	*	1					

FIG. 25 REAR AXLE HOUSING SYSTEM

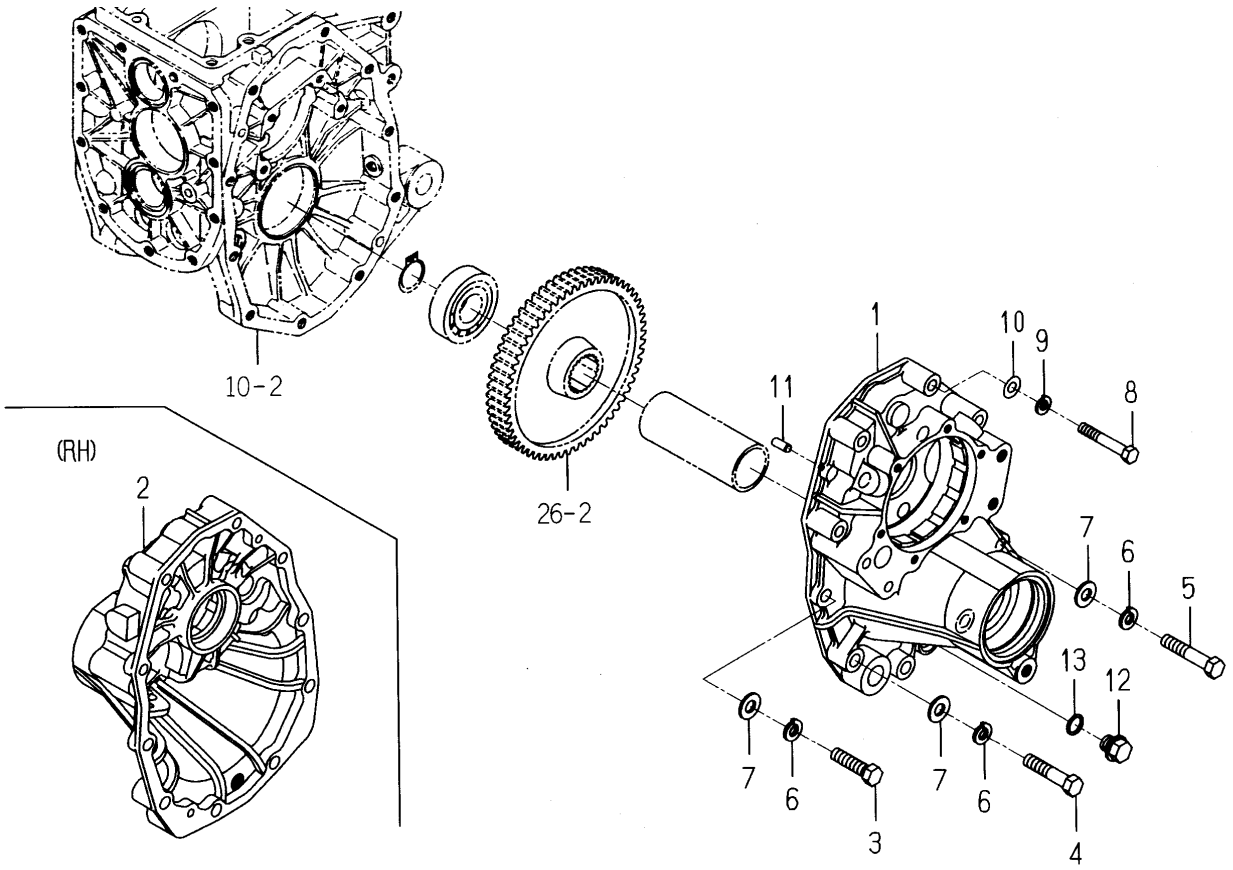

1738-306 -0100

KEY	PART CODE	DESCRIPTION	SPC	TYPE OF MODEL TM3160		ITC	COL	GRP	REMARKS
1	1717-306-001-30	HOUSING/AXLE/LH	*	1					
2	1717-306-002-30	HOUSING/AXLE/RH	*	1					
3	V201-261-204-00	BOLT/M12X40	*	4					
4	V201-261-205-50	BOLT/M12X55	*	6					
5	V201-261-206-00	BOLT/M12X60	*	2					
6	V401-160-012-00	WASHER,SP/M12	*	12					
7	V411-260-012-00	WASHER /M12	*	10					
8	V201-261-006-00	BOLT/M10X60	*	4					
9	V401-160-010-00	WASHER,SP/M10	*	4					
10	V411-260-010-00	WASHER/M10	*	4					
11	V522-100-801-80	PIN	*	4					
12	1427-201-007-00	PLUG,DRAIN	*	2					
13	V720-102-401-60	O-RING/P16	*	2					

FIG. 26 SHAFT (WHEEL) SYSTEM

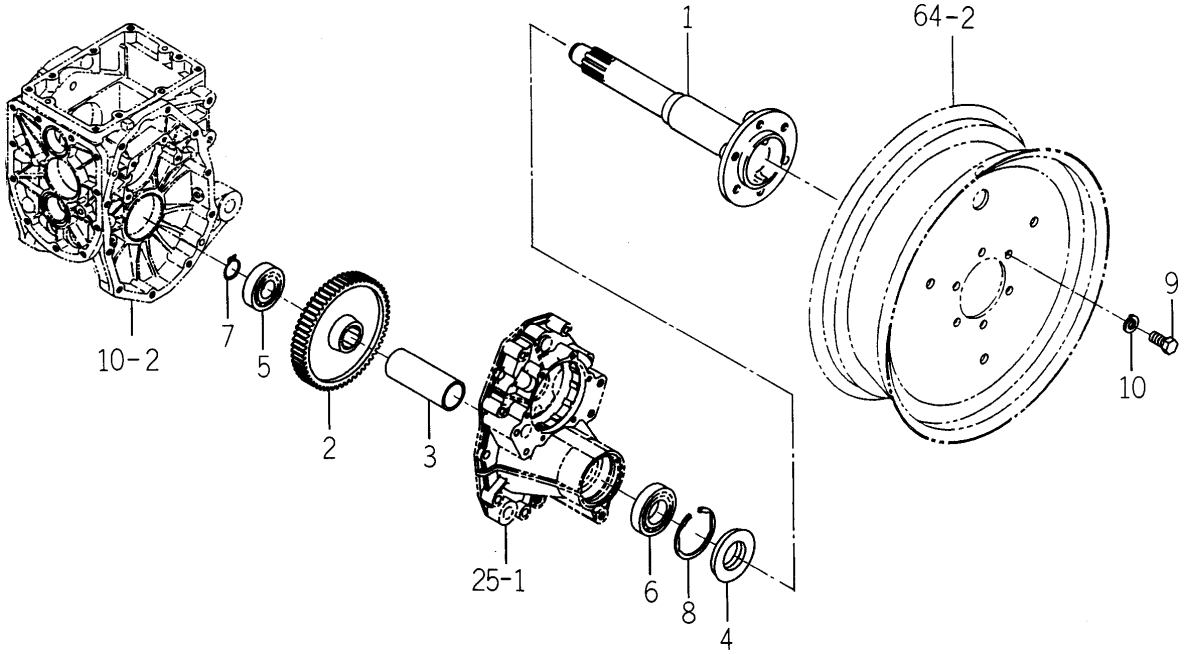

1672-307A-0100

KEY	PART CODE	DESCRIPTION	SPC	TYPE OF MODEL TM3160		ITC	COL	GRP	REMARKS
1	1672-307-001-10	SHAFT/WHEEL	*	2					
2	1427-307-002-10	GEAR,WHEEL/58	*	2					
3	1427-307-003-00	PIPE/123	*	2					
4	1491-307-201-00	SEAL,OIL/QLF488011.5	*	2					
5	V600-110-630-60	BEARING,RB/6306	*	2					
6	V600-110-620-80	BEARING,RB/6208	*	2					
7	V704-140-030-00	RING,SNAP/30 C	*	2					
8	V707-140-080-00	RING/SNAP	*	2					
9	V201-361-202-50	BOLT/M12X25	*	12					
10	V401-160-012-00	WASHER,SP/M12	*	12					

FIG. 27 PEDAL (DIFF-LOCK) SYSTEM

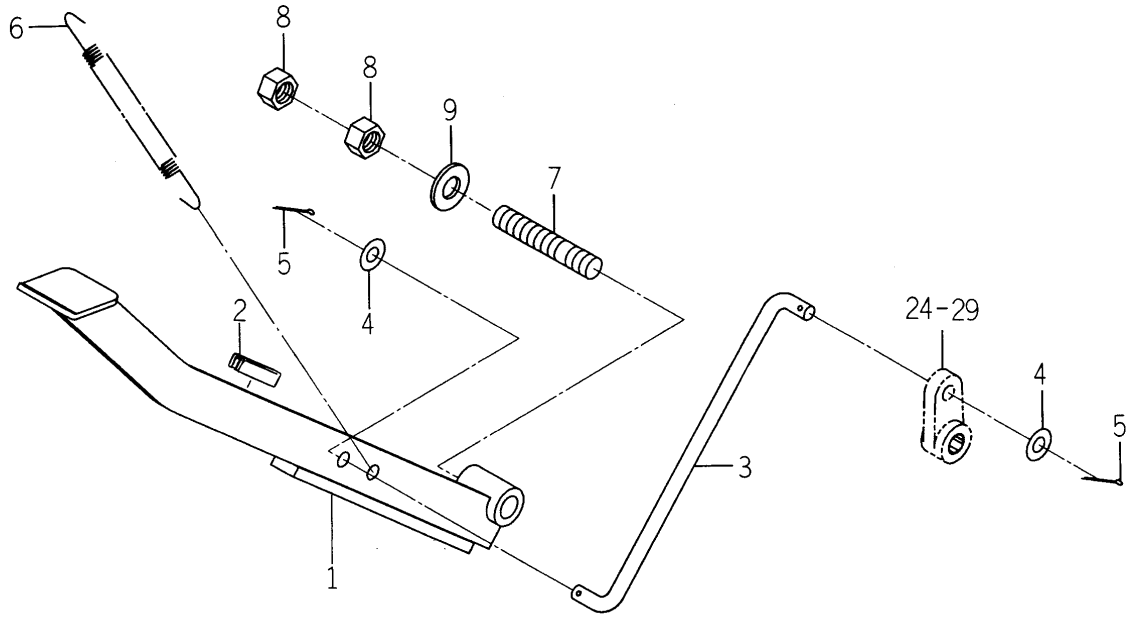

1738-309 -0100

KEY	PART CODE	DESCRIPTION	SPC	TYPE OF MODEL TM3160		ITC	COL	GRP	REMARKS
1	1717-309-200-10	ARM/DIEF COMP	*	1					
2	1560-314-001-00	INSULATOR	*	1					
3	1738-309-001-10	ROD/193	*	1					
4	V411-260-008-00	WASHER,PL/M 8	*	2					
5	V500-162-002-00	PIN,SPLIT/2 X20	*	2					
6	1427-301-021-00	SPRING,TENSION/121	*	1					
7	V251-261-205-50	BOLT/STUD	*	1					
8	V304-260-012-00	NUT/M12	*	2					
9	V411-260-012-00	WASHER /M12	*	1					

FIG. 28 BRAKE SYSTEM

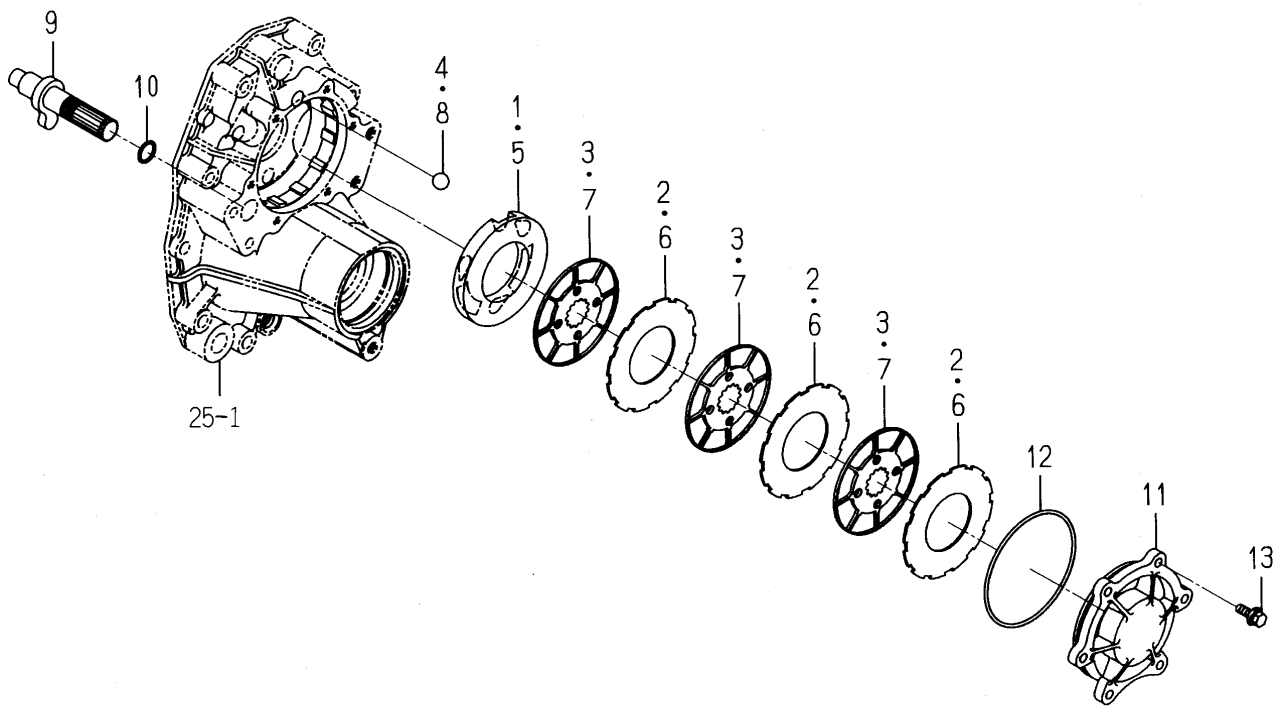

1717-310 -0100

KEY	PART CODE	DESCRIPTION	SPC	TYPE OF MODEL TM3160		ITC	COL	GRP	REMARKS
1	1717-310-002-10	PLATE/PRESSURE/LH	*	1					
2	1703-310-202-00	PLATE/SEPARATER	*	3					
3	1717-310-004-00	PLATE/FRICTION	*	3					
4	V682-200-001-90	BALL	*	3					
5	1717-310-003-10	PLATE/PRESSURE/RH	*	1					
6	1703-310-202-00	PLATE/SEPARATER	*	3					
7	1717-310-004-00	PLATE/FRICTION	*	3					
8	V682-200-001-90	BALL	*	3					
9	1717-310-200-00	CUM/BRAKE COMP	*	2					
10	V720-102-401-80	O-RING/P18	*	2					
11	1717-310-001-00	METAL/BRAKE	*	2					
12	V721-103-111-50	O-RING/G115	*	2					
13	V211-660-802-50	BOLT/M8X25	*	12					

FIG. 29 PEDAL (BRAKE) SYSTEM(1/2)

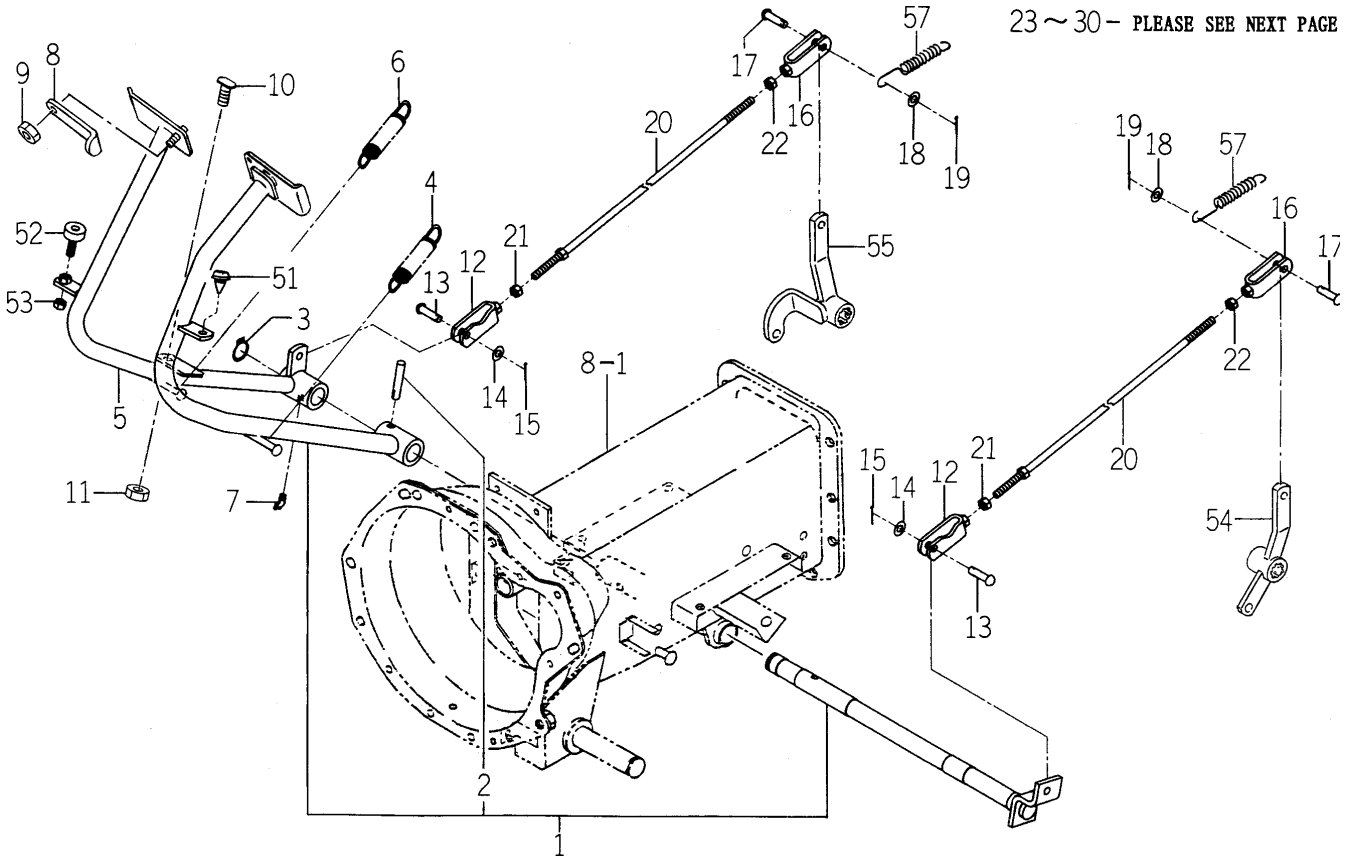

1738-312 -0100

KEY	PART CODE	DESCRIPTION	SPC	TYPE OF MODEL TM3160		ITC	COL	GRP	REMARKS
1	1738-312-320-20	PEDAL/BRAKE/LH SET	*	1					
2	V511-100-805-00	PIN,TAPER/8X50	*	1					
3	V704-140-022-00	RING,SNAP/22 C	*	1					
4	1673-314-001-00	SPRING/HE106	*	1					
5	1738-312-220-10	PEDAL/BRAKE/RH COMP	*	1					
6	1673-314-001-00	SPRING/HE106	*	1					
7	V763-150-000-00	NIPPLE,GREASE/PT1/8	*	1					
8	1675-312-051-00	LOCKPLATE	*	1					
9	P120-605-031-00	U-NUT	*	1					
10	1688-312-001-10	BOLT/ADJUST	*	1					
11	V304-260-008-00	NUT	*	1					
12	1415-312-500-00	YOKE,LH	*	2					
13	1404-312-006-00	PIN,YOKE A	*	2					
14	V411-260-008-00	WASHER,PL/M 8	*	2					
15	V500-162-002-00	PIN,SPLIT/2 X20	*	2					
16	1510-328-260-00	YOKE COMP	*	2					
17	1404-312-006-00	PIN,YOKE A	*	2					
18	V411-260-008-00	WASHER,PL/M 8	*	2					
19	V500-162-002-00	PIN,SPLIT/2 X20	*	2					
20	1738-312-310-00	ROD/355 COMP	*	2					
21	1560-132-007-30	NUT/M8	*	2					
22	V304-260-008-00	NUT	*	2					
23	1740-313-300-00	LEVER/PARKING ASSY	*	1					
24	1442-313-202-00	ROD	*	1					
25	1444-328-273-00	SPRING	*	1					
26	1444-328-272-00	BUTTON	*	1					
27	1740-313-301-00	GRIP/ORANGE	*	1					
28	V211-360-802-50	BOLT/SP	*	2					
29	1738-312-280-00	ROD/115 COMP	*	1					
30	1738-312-290-00	ROD/70 COMP	*	1					

FIG. 29 PEDAL (BRAKE) SYSTEM(2/2)

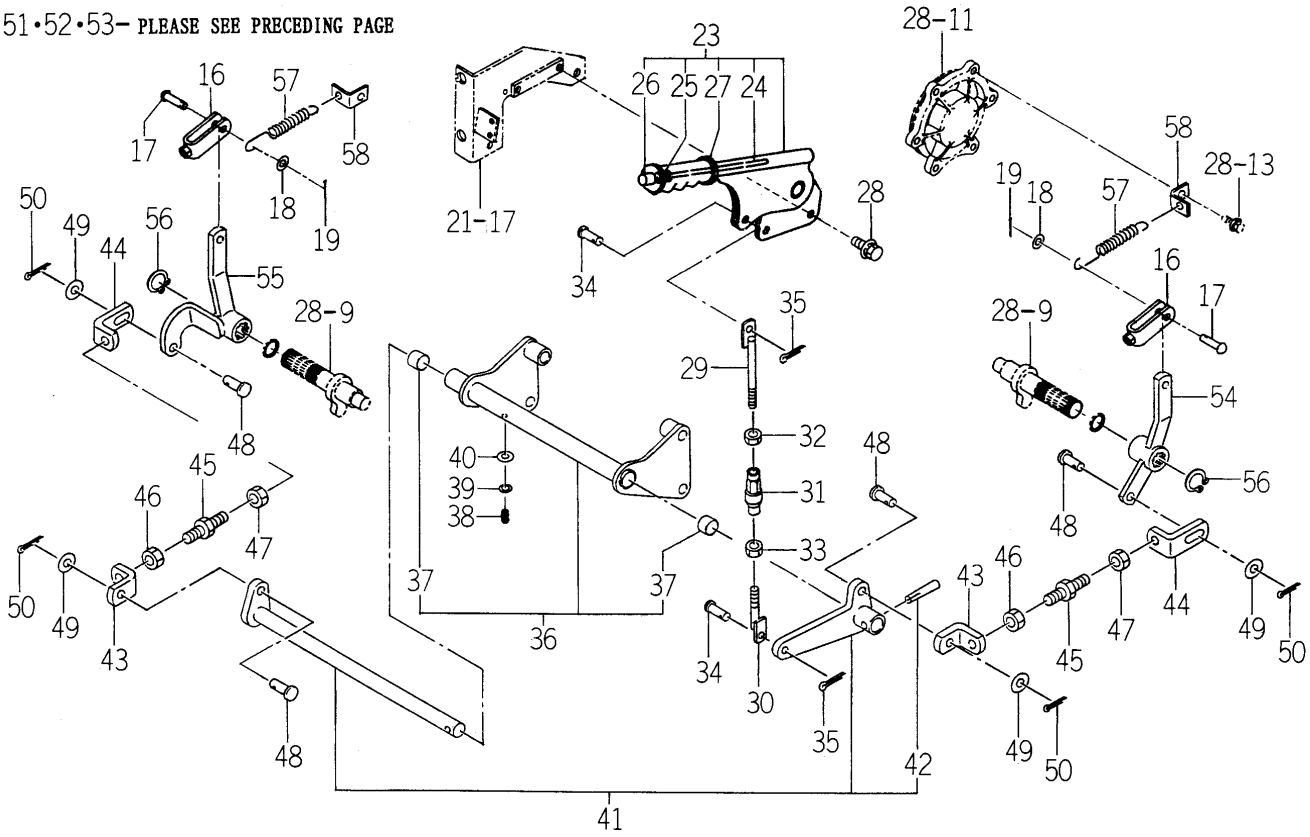

1738-312 -0100

KEY	PART CODE	DESCRIPTION	SPC	TYPE OF MODEL TM3160		ITC	COL	GRP	REMARKS
31	1444-122-002-00	TURNBUCKLE/M8	*	1					
32	V304-260-008-00	NUT	*	1					
33	1560-132-007-30	NUT/M8	*	1					
34	1673-730-008-00	PIN/08X19	*	2					
35	V500-162-002-00	PIN,SPLIT/2 X20	*	2					
36	1738-312-300-10	HOLDER/SHAFT ASSY	*	1					
37	3668-612-001-00	BUSH	*	2					
38	V760-150-000-00	NIPPLE,GREASE	*	1					
39	V401-160-006-00	WASHER,SP/M 6	*	1					
40	V411-260-006-00	WASHER / M6	*	1					
41	1738-312-200-00	SHAFT/BRAKE SET	*	1					
42	V511-100-805-00	PIN,TAPER/8X50	*	1					
43	1738-312-005-00	PLATE/PARKING/A	*	2					
44	1738-312-006-00	PLATE/PARKING/B	*	2					
45	1738-312-007-00	ROD/M12X66	*	2					
46	V304-260-012-00	NUT/M12	*	2					
47	2146-360-014-00	NUT/M12/LH	*	2					
48	1627-122-008-00	PIN/10X25	*	4					
49	V411-260-010-00	WASHER/M10	*	4					
50	V500-162-502-00	PIN,SPLIT/2.5X20	*	4					
51	1432-616-002-00	RUBBER,CUSHION	*	1					
52	1560-630-024-00	INSULATOR	*	1					
53	V304-260-008-00	NUT	*	1					
54	1738-312-240-00	ARM/BRAKE/LH COMP	*	1					
55	1738-312-260-00	ARM/BRAKE/RH COMP	*	1					
56	V704-140-022-00	RING,SNAP/22 C	*	2					
57	3659-480-003-00	SPRING/HE110	*	2					
58	1738-312-009-00	PLATE/L/28X28	*	2					

FIG. 30 STEERING WHEEL SYSTEM

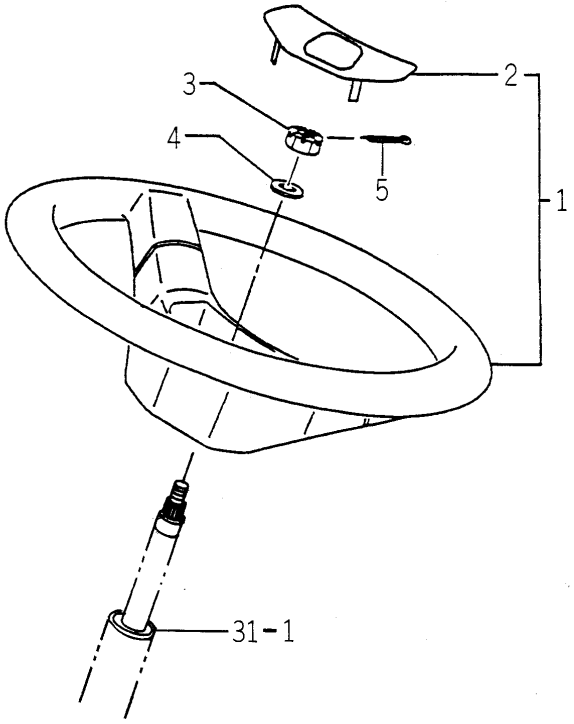

1703-401 -0100

KEY	PART CODE	DESCRIPTION	SPC	TYPE OF MODEL TM3160		ITC	COL	GRP	REMARKS
1	2161-331-400-10	STEERING/2/380 ASSY	*	1					
2	2161-331-401-10	CAP/STEERING	*	1					
3	V327-262-110-00	NUT/M10X1.25	*	1					
4	V411-260-010-00	WASHER/M10	*	1					
5	V500-162-002-00	PIN,SPLIT/2 X20	*	1					

FIG. 31 STEERING (MANUAL) SYSTEM

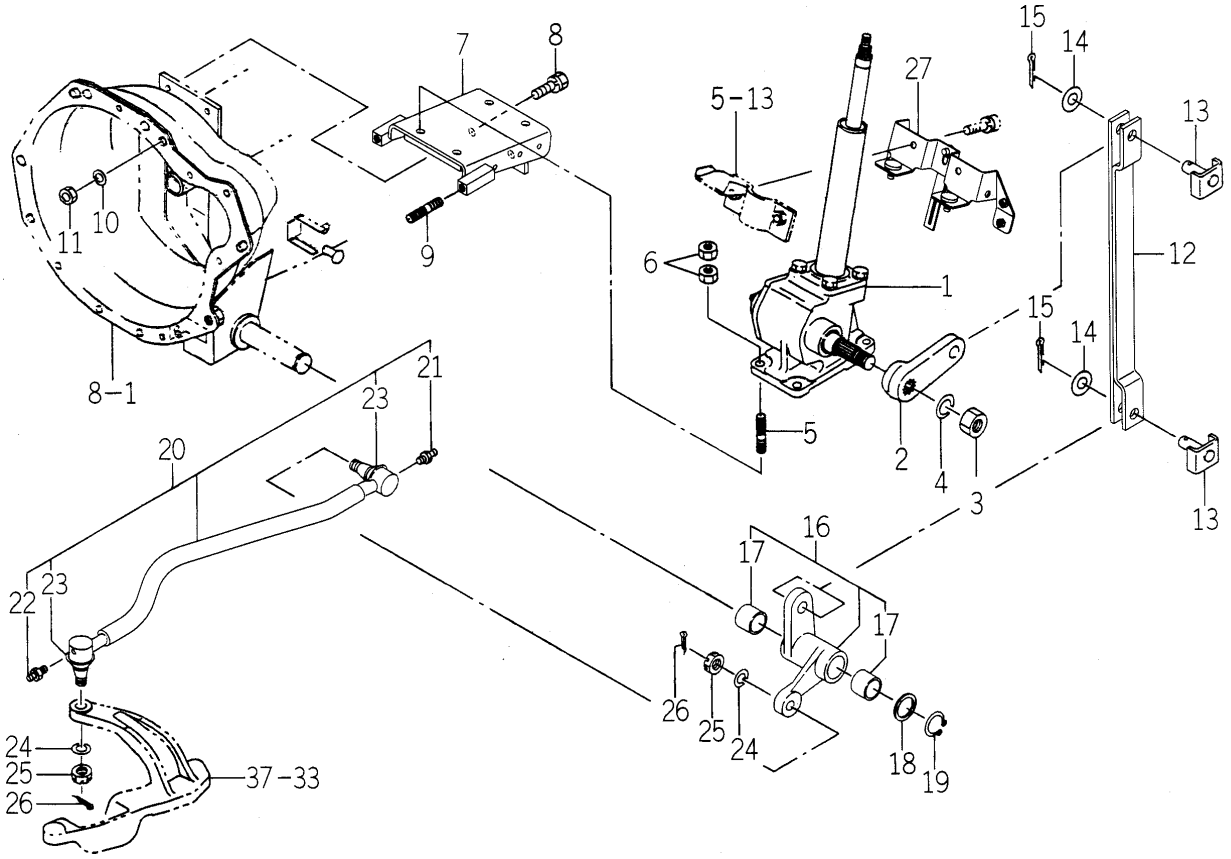

1738-406 -0100

KEY	PART CODE	DESCRIPTION	SPC	TYPE OF MODEL TM3160		ITC	COL	GRP	REMARKS
1	1682-406-210-10	CASE/STEERING ASSY	*	1					FIG 072
2	1672-406-201-00	ARM/PITMAN	*	1					
3	V334-260-020-00	NUT	*	1					
4	V401-160-020-00	WASHER,SP/M20	*	1					
5	1672-406-005-00	BOLT/STUD/M10X35	*	4					
6	V334-460-010-00	NUT/M10 7T P=1.25	*	8					
7	1738-406-200-00	BRACKET/STEERIN COMP	*	1					
8	V211-561-002-00	BOLT/M10X20	*	2					
9	V251-341-003-00	BOLT/STUD	*	2					
10	V401-160-010-00	WASHER,SP/M10	*	2					
11	V304-460-010-00	NUT/M10	*	2					
12	1738-406-210-00	ROD/STEERING COMP	*	1					
13	1726-406-260-00	PIN/15X42 COMP	*	2					
14	V411-260-014-00	WASHER,PL/M14	*	2					
15	V500-162-502-50	PIN,SPLIT/2.5X25	*	2					
16	1672-406-230-00	ARM/STEERING ASSY	*	1					
17	1593-402-051-10	BUSH/25X28X25	*	2					
18	1612-406-001-00	WASHER/26X35X02	*	1					
19	V704-140-025-00	RING,SNAP/25 C	*	1					
20	1738-406-240-00	ROD/DRAG ASSY	*	1					
21	1404-402-005-00	NIPPLE,GREASE	*	1					
22	1404-402-005-00	NIPPLE,GREASE	*	1					
23	1427-406-018-00	COVER,DUST	*	2					
24	V401-160-010-00	WASHER,SP/M10	*	2					
25	V327-262-110-00	NUT/M10X1.25	*	2					
26	V500-162-502-00	PIN,SPLIT/2.5X20	*	2					
27	1738-406-230-00	BRACKET/REAR COMP	*	1					

FIG. 32 BRACKET (AXLE) SYSTEM

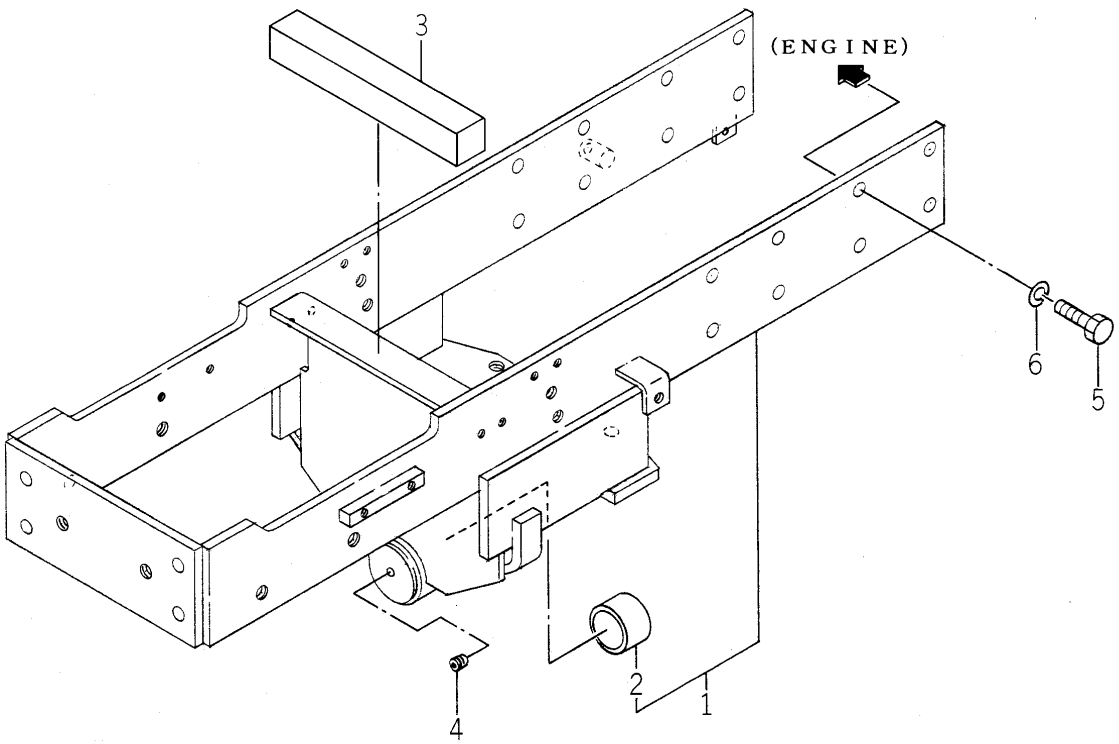

1738-410 -0100

KEY	PART CODE	DESCRIPTION	SPC	TYPE OF MODEL TM3160		ITC	COL	GRP	REMARKS
1	1738-410-210-00	BRACKET/AXLE ASSY	*	1					
2	1564-434-222-10	BUSH/35X39X26	*	1					
3	1738-410-001-00	INSULATOR/30X30X200	*	1					
4	V780-140-000-10	PLUG/SCREW	*	1					
5	V203-361-002-50	BOLT	*	16					
6	V401-160-010-00	WASHER,SP/M10	*	16					

FIG. 33 HITCH (FRONT) SYSTEM (R TYPE)

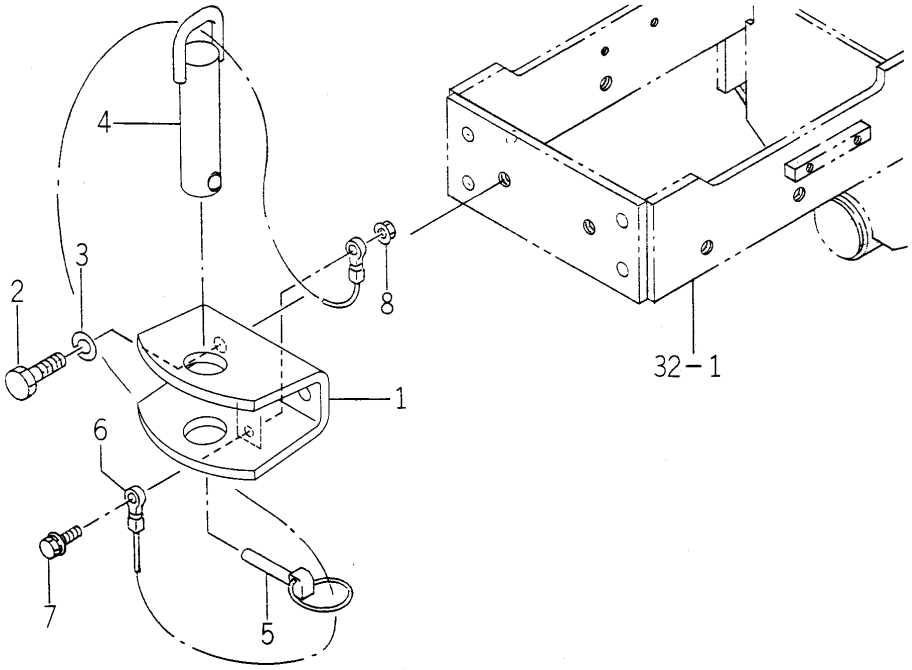

1738-411 -0100

KEY	PART CODE	DESCRIPTION	SPC	TYPE OF MODEL TM3160		ITC	COL	GRP	REMARKS
1	1738-411-210-00	HITCH/FRONT COMP	*	1					
2	V201-361-202-50	BOLT/M12X25	*	2					
3	V401-160-012-00	WASHER,SP/M12	*	2					
4	1674-410-320-00	PIN/30X120 COMP	*	1					
5	1673-525-002-20	LINKPIN	*	1					
6	1674-410-301-00	CABLE	*	1					
7	V211-360-803-00	BOLT/SP	*	1					
8	V363-260-008-00	NUT/WASHER	*	1					

FIG. 34 SHAFT (DRIVE) SYSTEM

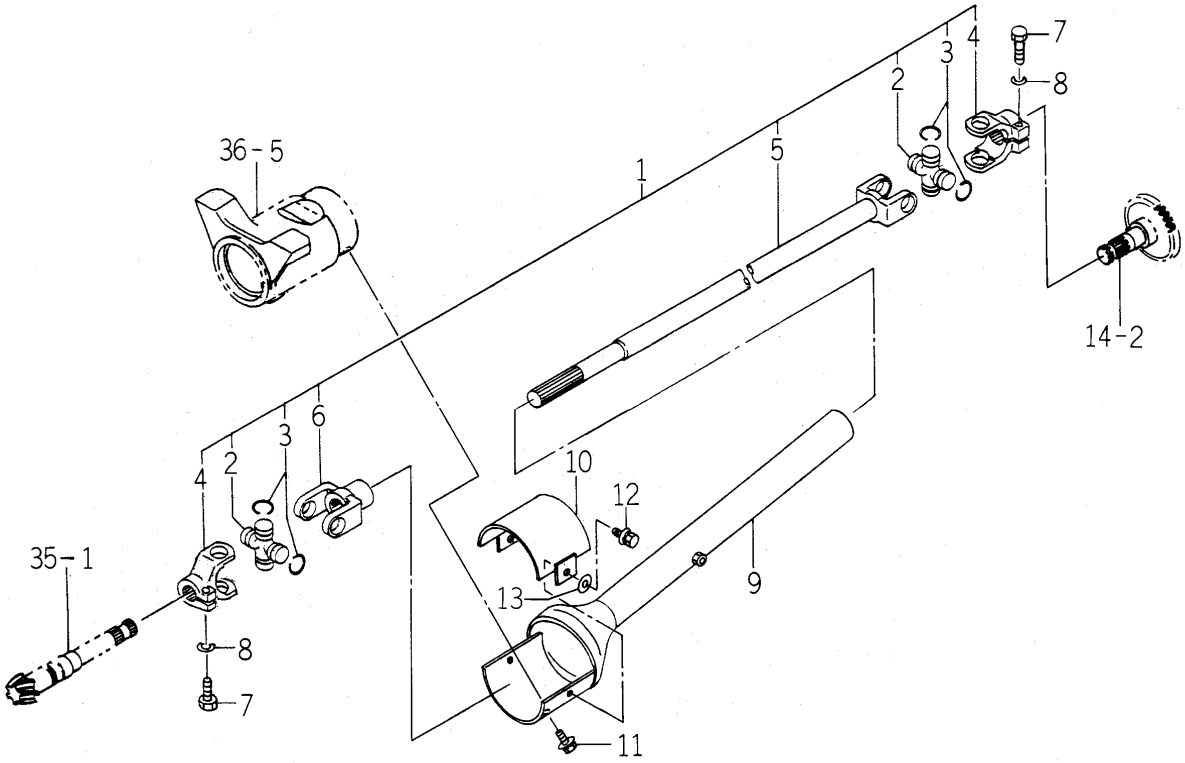

1738-431 -0100

KEY	PART CODE	DESCRIPTION	SPC	TYPE OF MODEL TM3160		ITC	COL	GRP	REMARKS
1	1738-431-210-00	SHAFT/4WD ASSY	*	1					
2	1725-120-211-00	KIT/JOINT	*	2					
3	1725-120-212-00	RING/SNAP	*	8					
4	1725-120-213-00	YOKE/CLAMP	*	2					
5	1725-120-214-00	YOKE/SHAFT	*	1					
6	1725-120-216-00	YOKE/SLEEVE	*	1					
7	1575-261-203-00	BOLT/SM/M8X1.25X30	*	2					
8	V401-160-008-00	WASHER,SP/M 8	*	2					
9	1738-431-220-00	CASE/JOINT/A COMP	*	1					
10	1738-431-230-00	CASE/JOINT/B COMP	*	1					
11	V211-360-801-60	BOLT,SEMS (SP)	*	2					
12	V210-360-601-20	BOLT,SEMS	*	2					
13	V411-260-008-00	WASHER,PL/M 8	*	2					

FIG. 35 BEVEL CASE SYSTEM

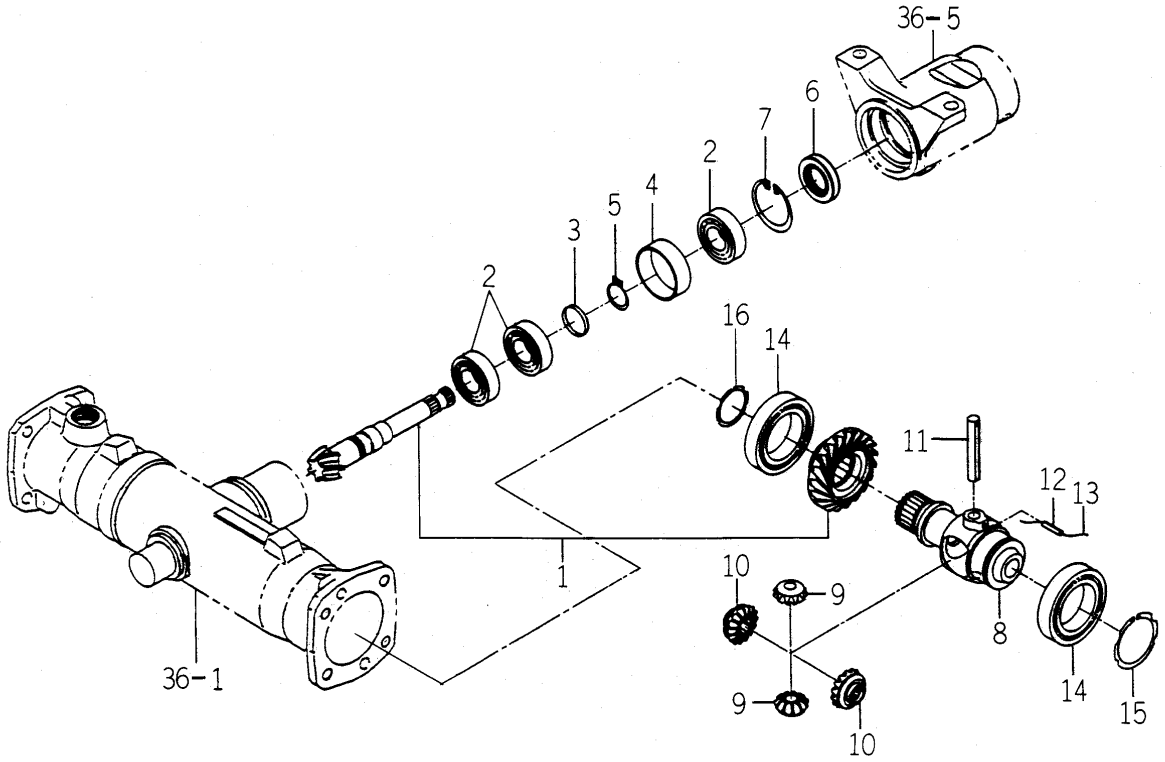

1738-432 -0100

KEY	PART CODE	DESCRIPTION	SPC	TYPE OF MODEL TM3160		ITC	COL	GRP	REMARKS
1	1738-432-200-00	PINION/BEVEL SET	*	1					
2	V600-110-620-50	BEARING,RB/6205	*	3					
3	1507-216-004-10	COLLAR/25X32X3	*	1					
4	1650-432-001-00	COLLAR/48X52X17	*	1					
5	V704-140-025-00	RING,SNAP/25 C	*	1					
6	1427-432-016-00	SEAL,OIL/21	*	1					
7	V705-140-052-00	RING,SNAP/52 C	*	1					
8	1703-432-001-00	CASE/DIFF	*	1					
9	1703-432-009-00	PINION/BEVEL/11	*	2					
10	1703-432-011-00	GEAR/BEVEL/15	*	2					
11	1614-432-006-00	PIN/12X75	*	1					
12	V580-140-502-50	PIN,SPRING/5 X25 W	*	1					
13		WIRE	*	1					
14	V600-110-601-00	BEARING,RB/6010	*	2					
15	V706-140-050-00	RING/SNAP	*	1					
16	V706-140-040-00	RING/SNAP	*	1					

FIG. 36 AXLE HOUSING SYSTEM

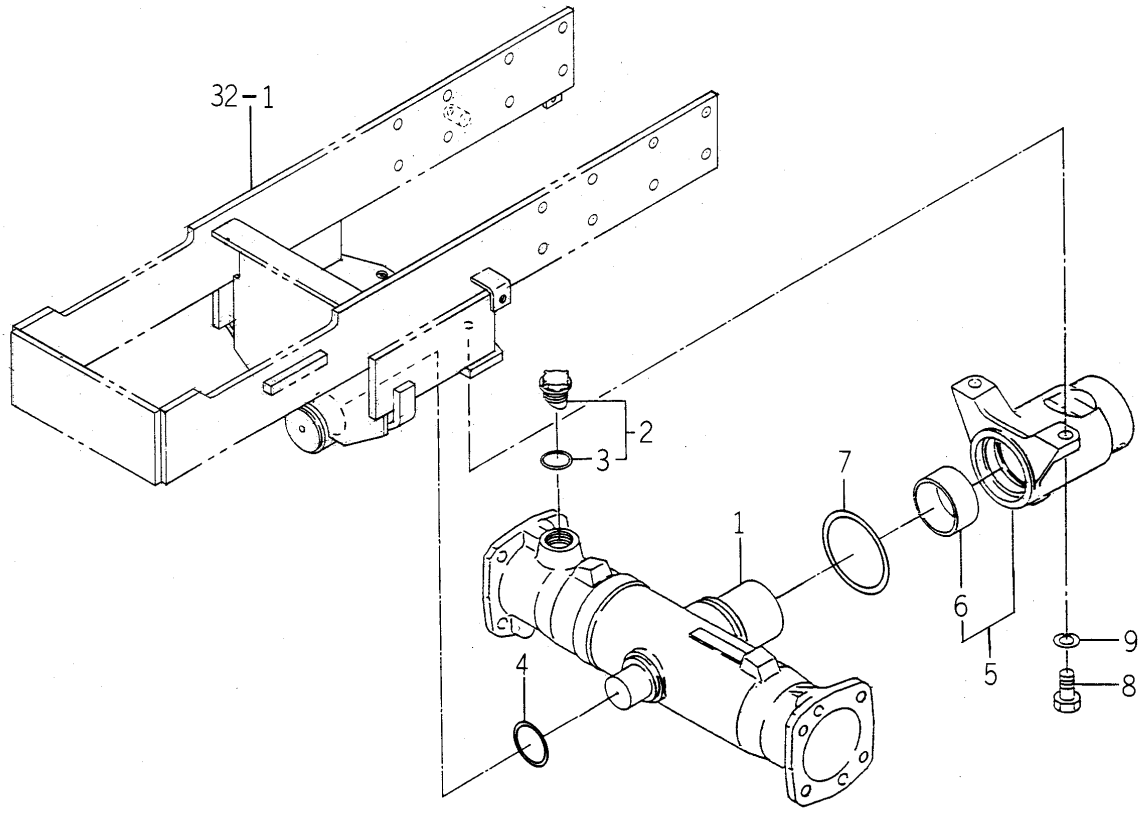

1738-433 -0100

KEY	PART CODE	DESCRIPTION	SPC	TYPE OF MODEL TM3160		ITC	COL	GRP	REMARKS
1	1738-433-001-00	HOUSING/AXLE	*	1					
2	1518-432-250-00	CAP,OIL ASSY	*	1					
3	1518-306-203-00	PACKING	*	1					
4	V720-103-504-20	RING/O	*	1					
5	1738-433-200-10	METAL/PIVOT/REA ASSY	*	1					
6	1614-433-212-00	BUSH/62X67X30	*	1					
7	V721-103-107-00	O-RING/G70	*	1					
8	V201-361-203-00	BOLT/M12X30	*	2					
9	V401-160-012-00	WASHER,SP/M12	*	2					

FIG. 37 FINAL GEAR CASE SYSTEM

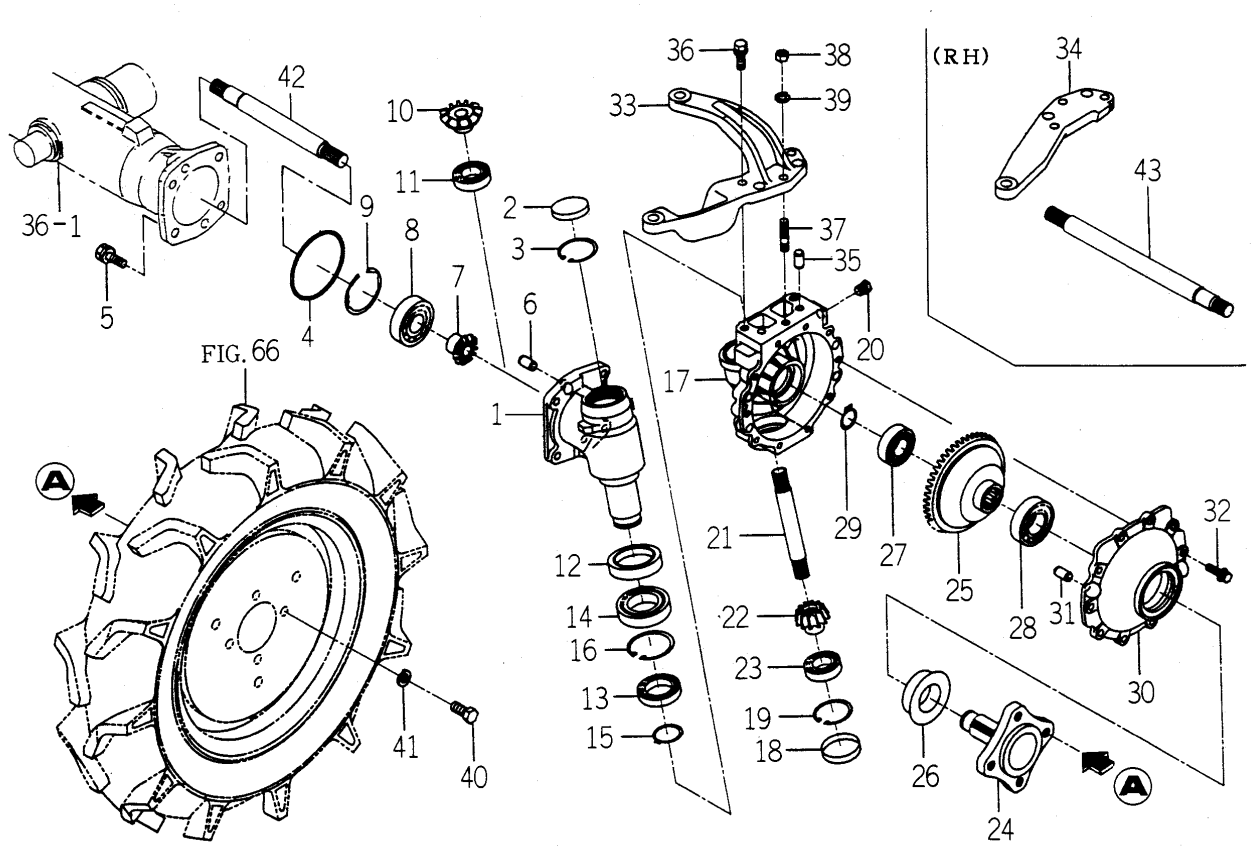

1726-434 -0100,1703-435 -0100

KEY	PART CODE	DESCRIPTION	SPC	TYPE OF MODEL TM3160		ITC	COL	GRP	REMARKS
1	1672-434-009-00	CASE/FINAL	*	2					
2	1564-201-003-00	CAP/SEAL/47	*	2					
3	V705-140-047-00	RING,SNAP/47 C	*	2					
4	V721-103-109-00	O-RING/G90	*	2					
5	V211-561-003-00	BOLT/M10X30	*	8					
6	V523-101-002-40	PIN	*	4					
7	1703-434-003-00	GEAR/BEVEL/11	*	2					
8	V600-110-630-50	BEARING,RB/6305	*	2					
9	V707-140-062-00	RING/SNAP	*	2					
10	1703-434-004-00	GEAR/BEVEL/15	*	2					
11	V600-110-600-50	BEARING,RB/6005	*	2					
12	1488-413-023-10	SEAL,OIL	*	2					
13	V600-110-690-70	BEARING	*	2					
14	V600-110-600-80	BEARING,RB/6008	*	2					
15	V704-140-035-00	RING,SNAP/35 C	*	2					
16	V707-140-055-00	RING/SNAP	*	2					
17	1672-434-011-10	CASE/FINAL	*	2					
18	1564-201-003-00	CAP/SEAL/47	*	2					
19	V705-140-047-00	RING,SNAP/47 C	*	2					
20	V782-160-000-4B	PLUG/SCREW/SEAL	*	4					
21	1612-434-006-00	SHAFT	*	2					
22	1672-434-007-00	GEAR/BEVEL/12	*	2					
23	V600-110-600-50	BEARING,RB/6005	*	2					
24	1681-434-002-10	SHAFT/WHEEL	*	2					
25	1672-434-008-00	GEAR/BEVEL/47	*	2					
26	1491-434-017-00	SEAL/QLNY35571116	*	2					
27	V600-110-620-50	BEARING,RB/6205	*	2					
28	V600-110-620-60	BEARING,RB/6206	*	2					
29	V704-140-025-00	RING,SNAP/25 C	*	2					
30	1612-434-009-00	COVER/WHEEL	*	2					

FIG. 37 FINAL GEAR CASE SYSTEM

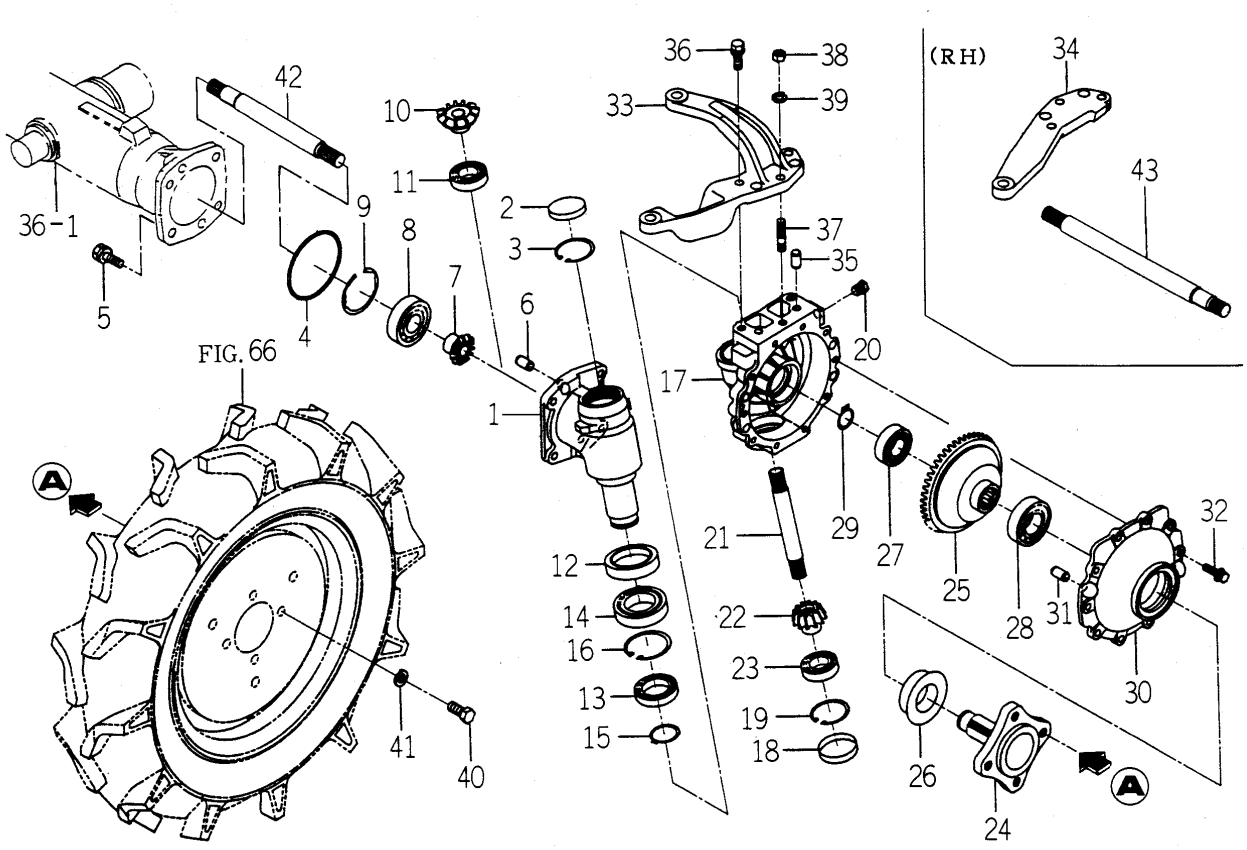

1726-434 -0100,1703-435 -0100

KEY	PART CODE	DESCRIPTION	SPC	TYPE OF MODEL TM3160		ITC	COL	GRP	REMARKS
31	V523-101-002-40	PIN	*	4					
32	V211-360-802-50	BOLT/SP	*	20					
33	1726-434-001-00	ARM/KNUCKLE/LH	*	1					
34	1726-434-004-00	ARM/KNUCKLE/RH	*	1					
35	V523-101-002-40	PIN	*	4					
36	V211-561-003-50	BOLT/S	*	4					
37	V251-341-002-8D	BOLT/STUD/SEAL	*	2					
38	V304-460-010-00	NUT/M10	*	2					
39	V401-160-010-00	WASHER,SP/M10	*	2					
40	V201-361-202-50	BOLT/M12X25	*	8					
41	V401-160-012-00	WASHER,SP/M12	*	8					
42	1703-435-001-00	SHAFT	*	1					
43	1703-435-002-00	SHAFT	*	1					

FIG. 38 TIE ROD SYSTEM

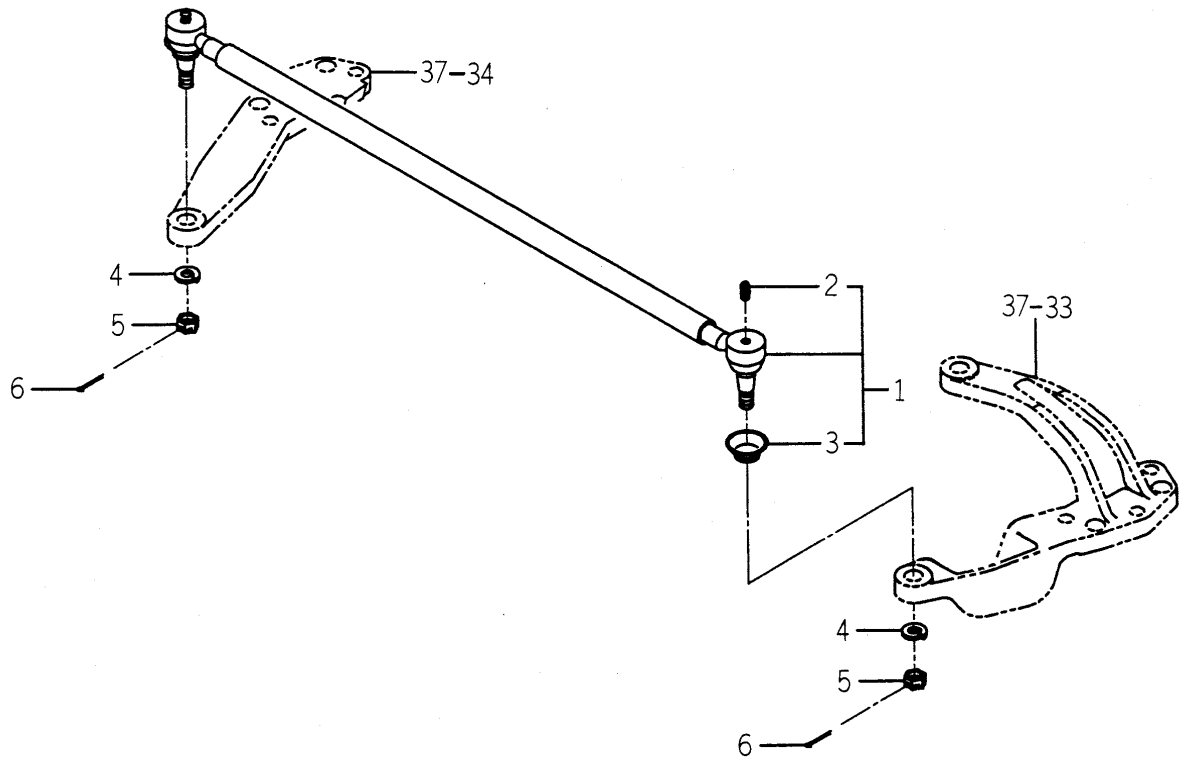

1717-436B-0100

KEY	PART CODE	DESCRIPTION	SPC	TYPE OF MODEL TM3160		ITC	COL	GRP	REMARKS
1	1717-436-200-00	ROD/TIE/589 ASSY	*	1					
2	1404-402-005-00	NIPPLE,GREASE	*	2					
3	1427-406-018-00	COVER,DUST	*	2					
4	V401-160-010-00	WASHER,SP/M10	*	2					
5	V327-262-110-00	NUT/M10X1.25	*	2					
6	V500-162-502-00	PIN,SPLIT/2.5X20	*	2					

FIG. 39 CASE (CYLINDER) SYSTEM

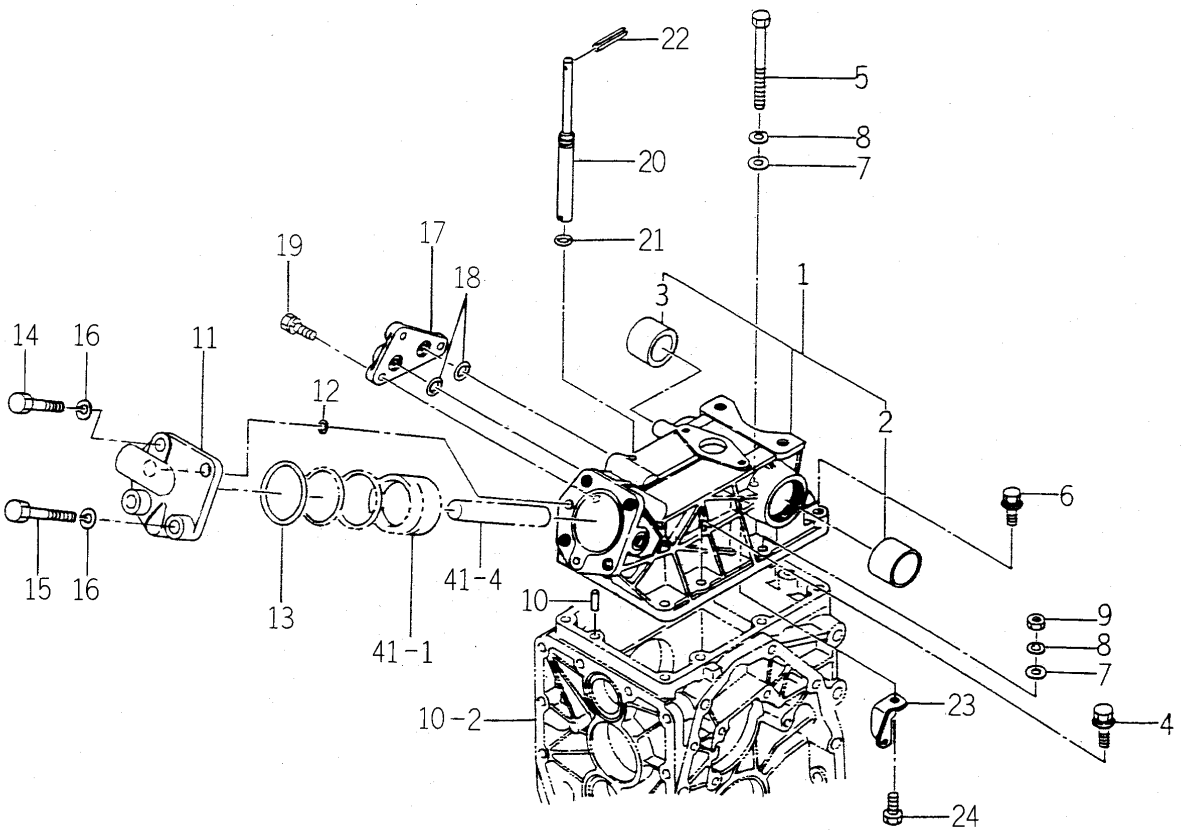

1738-501 -0100

KEY	PART CODE	DESCRIPTION	SPC	TYPE OF MODEL TM3160		ITC	COL	GRP	REMARKS
1	1579-501-200-00	CASE,SYLINDER	*	1					
2	1480-501-003-00	BUSH/40X43X30	*	1					
3	1427-501-003-00	BUSH/35X39X30	*	1					
4	V211-361-004-00	BOLT,SEMS	*	4					
5	V201-261-010-00	BOLT/M10X100	*	1					
6	V211-361-004-50	BOLT/M10X45	*	2					
7	V411-260-010-00	WASHER/M10	*	3					
8	V401-160-010-00	WASHER,SP/M10	*	3					
9	V304-260-010-00	NUT	*	2					
10	V522-100-801-80	PIN	*	2					
11	1717-501-002-00	HEAD/CYLINDER	*	1					
12	V720-112-401-20	O-RING/P12	*	2					
13	V721-113-106-00	O-RING G60	*	1					
14	V201-361-204-00	BOLT/M12X40	*	2					
15	V201-361-206-00	BOLT	*	2					
16	V401-160-012-00	WASHER,SP/M12	*	4					
17	1434-501-003-10	SUBCONCOVER	*	1					
18	V720-112-401-20	O-RING/P12	*	3					
19	V211-260-802-50	BOLT/S	*	3					
20	1738-501-001-00	PIN/ADJUST	*	1					
21	V720-101-900-70	O-RING/P 7	*	1					
22	V580-140-403-60	PIN,SPRING 3X32	*	1					
23	1434-501-005-00	HOOK,SPRING	*	1					
24	V201-260-801-60	BOLT/M 8X16	*	1					

FIG. 40 LIFT ARM SYSTEM

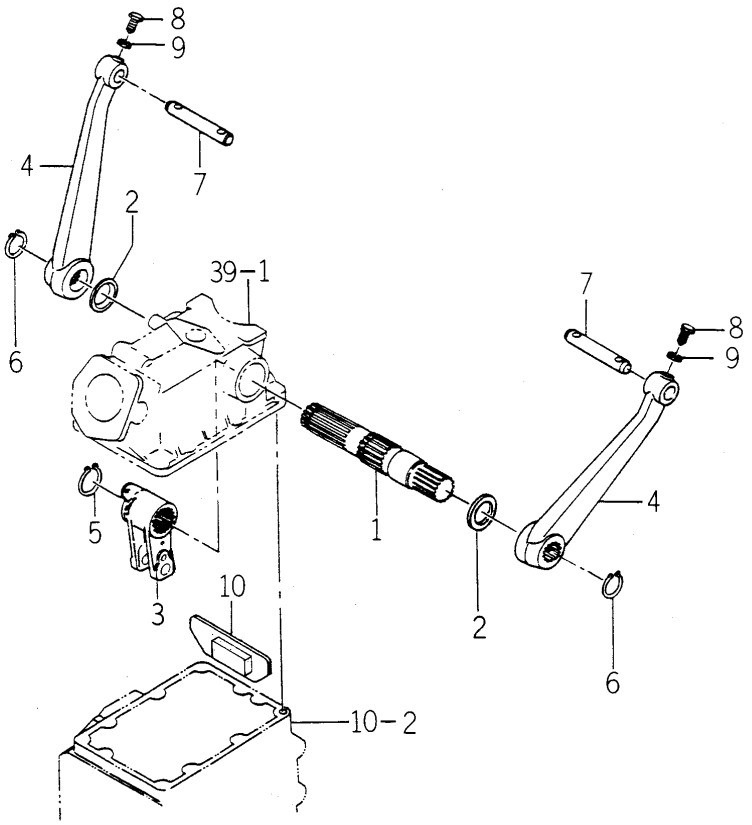

1738-502 -0100

KEY	PART CODE	DESCRIPTION	SPC	TYPE OF MODEL TM3160		ITC	COL	GRP	REMARKS
1	1672-502-003-00	SHAFT/LIFT	*	1					
2	V742-135-500-60	SEAL,OIL/VC35506	*	2					
3	1738-502-001-00	CRANK/LIFT	*	1					
4	1672-502-004-00	ARM/LIFT	*	2					
5	V706-140-040-00	RING/SNAP	*	1					
6	V704-140-035-00	RING,SNAP/35 C	*	2					
7	1427-502-003-00	PIN,LIFT ARM	*	2					
8	1600-502-003-00	BOLT,SM/M08X25	*	2					
9	V305-260-008-00	NUT/M 8	*	2					
10	1738-502-210-10	STOPPER/CRANK COMP	*	1					

FIG. 41 CYLINDER SYSTEM

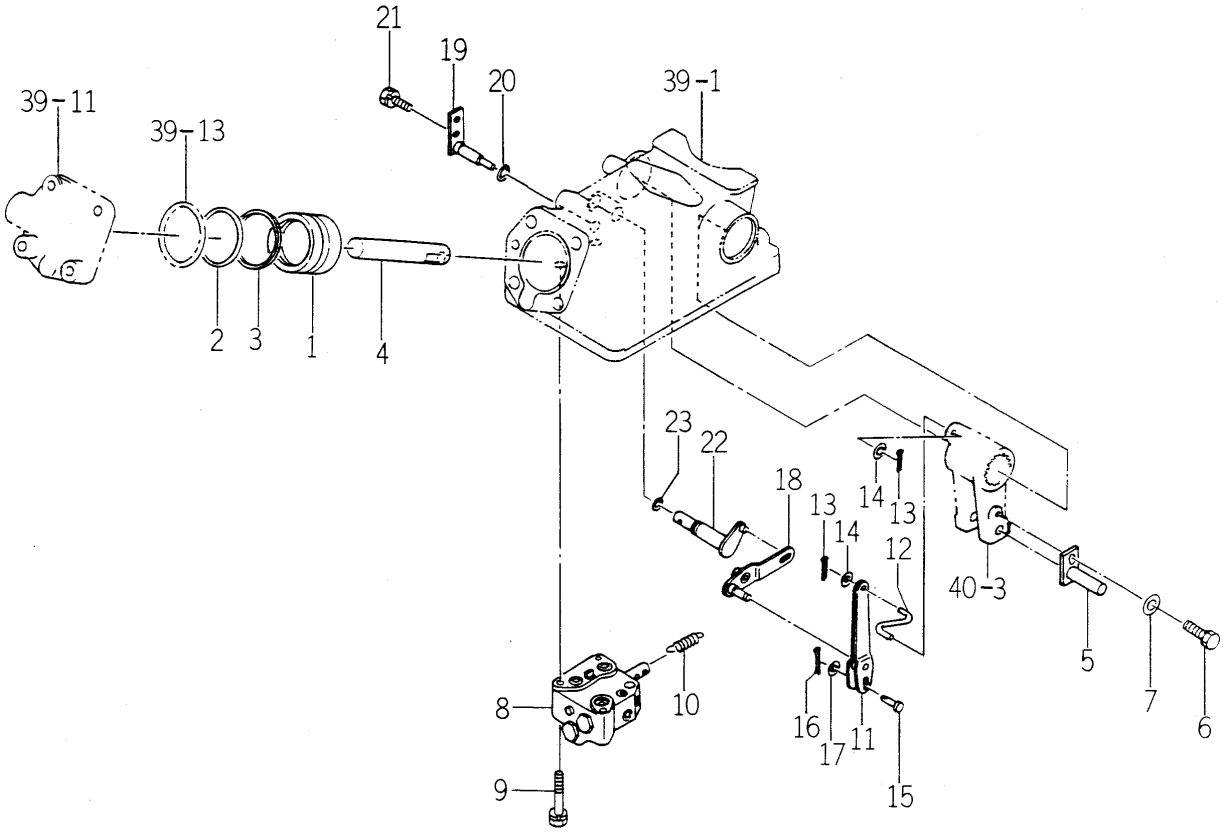

1738-503 -0100

KEY	PART CODE	DESCRIPTION	SPC	TYPE OF MODEL TM3160		ITC	COL	GRP	REMARKS
1	1421-507-002-10	PISTON	*	1					
2	V720-105-705-50	O-RING/P55	*	1					
3	1416-501-011-00	RING,BACKUP	*	1					
4	1544-503-001-20	ROD	*	1					
5	1544-503-200-20	PIN,ROD COMP	*	1					
6	V211-561-001-60	BOLT(S)7	*	1					
7	V411-260-010-00	WASHER/M10	*	1					
8	K211-001-000-00	VALVE CONTROL ASSY	*	1					FIG 071
9	V211-260-805-00	BOLT/M8X50	*	3					
10	1434-501-006-00	SPRING,TENSION/31	*	1					
11	1717-503-200-10	LINK/SPOOL COMP	*	1					
12	1434-503-001-00	LINK,CRANK	*	1					
13	V500-162-001-50	PIN,SPLIT/2 X15	*	2					
14	V411-260-006-00	WASHER / M6	*	2					
15	1434-503-002-00	PIN/5X17	*	1					
16	V500-162-001-50	PIN,SPLIT/2 X15	*	1					
17	V411-260-005-00	WASHER	*	1					
18	1672-503-210-00	LINK/SUPPORT COMP	*	1					
19	1434-503-250-10	PIN/SUPPORT COMP	*	1					
20	V720-101-900-70	O-RING/P 7	*	1					
21	V211-260-801-60	BOLT,SEMS (S) M8X16	*	1					
22	1434-503-260-20	LINK SHIFT ARM	*	1					
23	V720-102-401-00	O-RING/P10A	*	1					

FIG. 42 CONTROL SYSTEM

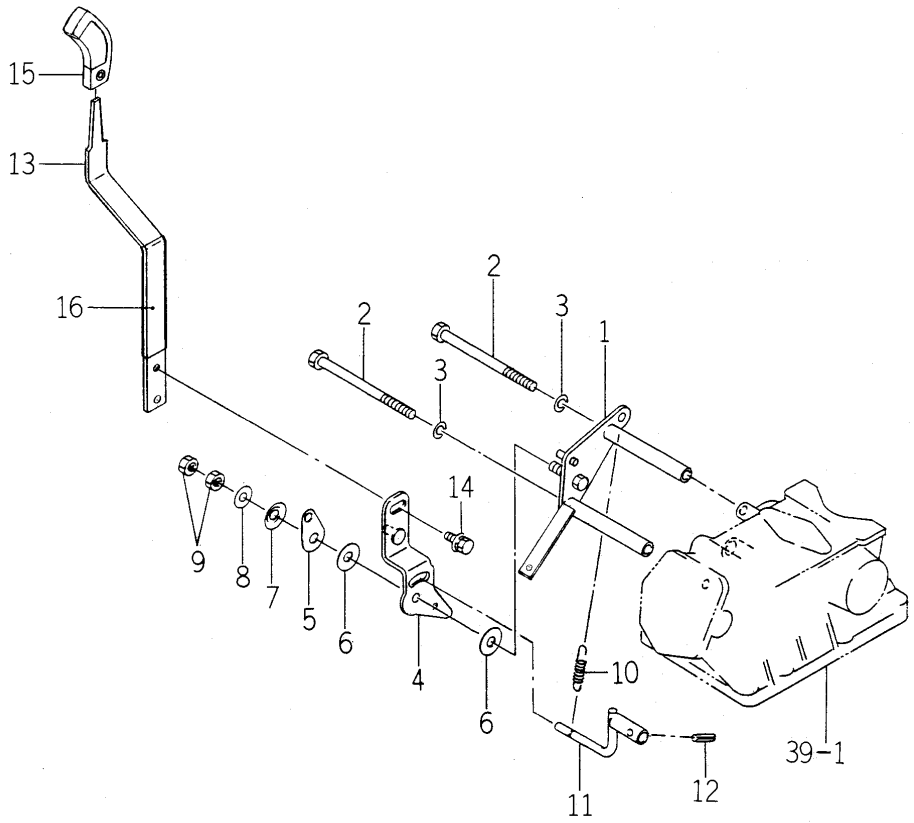

1738-505 -0100

KEY	PART CODE	DESCRIPTION	SPC	TYPE OF MODEL TM3160		ITC	COL	GRP	REMARKS
1	1738-505-200-00	BRACKET/LEVER COMP	*	1					
2	V201-260-813-00	BOLT/M 8X130	*	2					
3	V401-160-008-00	WASHER,SP/M 8	*	2					
4	1738-505-210-10	ARM/POSITION COMP	*	1					
5	1614-505-002-00	PLATE	*	1					
6	1614-505-003-00	LINING/11X30X02	*	2					
7	1614-505-004-00	SPRING/WASHER	*	1					
8	V411-260-010-00	WASHER/M10	*	1					
9	V304-260-010-00	NUT	*	2					
10	1414-312-002-00	SPRING,TENSION/53	*	1					
11	1612-505-220-00	ARM/POSITION COMP	*	1					
12	V580-140-502-00	PIN,SPRING/5 X20 W	*	1					
13	1738-505-002-10	LEVER/POSITION	*	1					
14	V211-360-801-60	BOLT,SEMS (SP)	*	1					
15	1614-505-007-00	GRIP/03X17X97	*	1					
16	1725-266-001-00	INSULATOR/120	*	1					

FIG. 43 PIPING SYSTEM

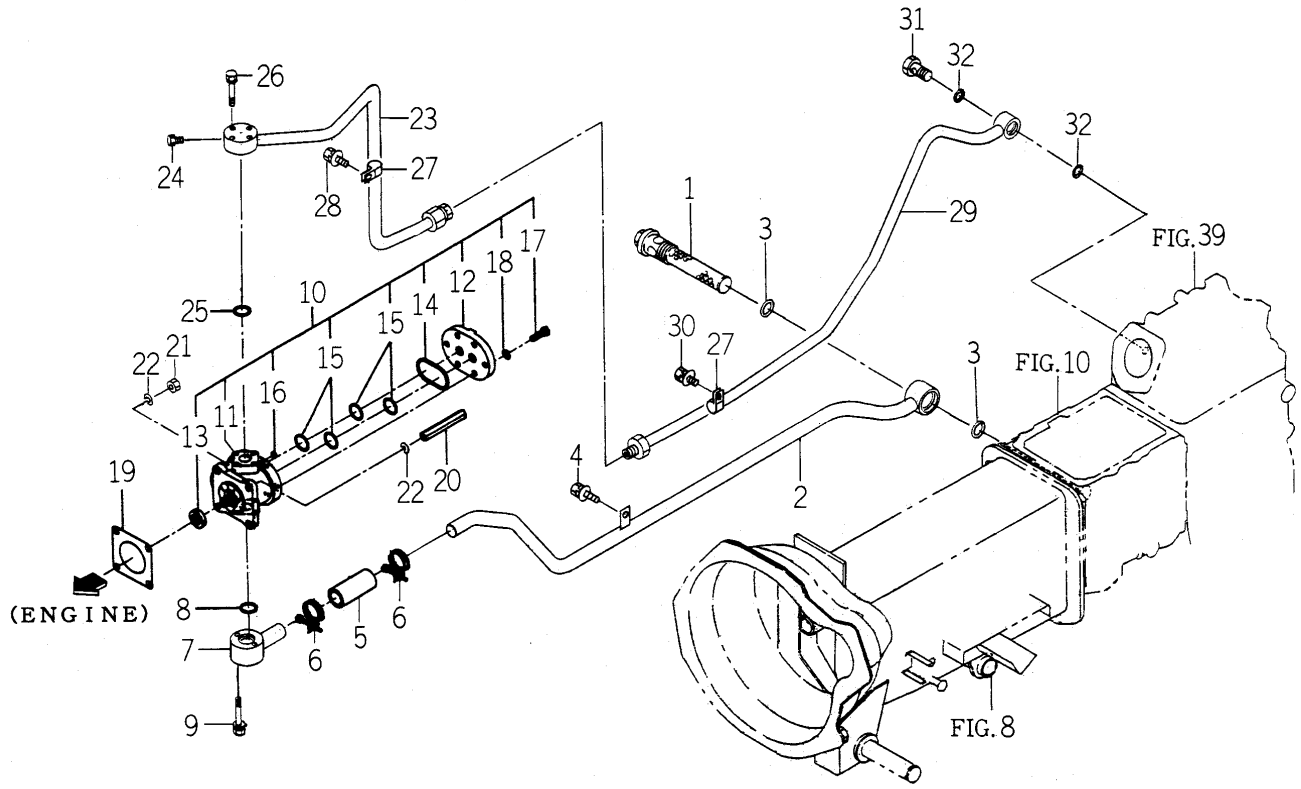

1738-508 -0100

KEY	PART CODE	DESCRIPTION	SPC	TYPE OF MODEL TM3160		ITC	COL	GRP	REMARKS
1	1738-508-210-00	FILTER/SUCTION COMP	*	1					
2	1738-508-220-00	PIPE/SUCTION/REAR	*	1					
3	V720-113-502-80	RING/O	*	2					
4	V211-360-801-60	BOLT,SEMS (SP)	*	1					
5	1675-508-004-00	HOSE/70	*	1					
6	J061-224-032-00	CLAMP/WIRE/24-32	*	2					
7	1726-508-230-00	PIPE/SUC/FRONT COMP	*	1					
8	V720-112-402-00	O-RING/P20	*	1					
9	V210-560-604-50	BOLT/S	*	2					
10	K135-023-000-00	PUMP GEAR ASSY	*	1					
11	K135-023-100-00	GEAR PUMP SET	*	1					
12	K135-017-006-00	COVER,PUMP	*	1					
13	V744-114-280-70	SEAL,OIL	*	1					
14	V721-113-105-00	O-RING HS90 G50	*	1					
15	V720-112-402-20	O-RING/P22	*	4					
16	V720-111-900-60	O-RING P6 HS90	*	1					
17	K135-002-009-00	BOLT/M8X28 11T	*	6					
18	V401-170-008-00	S.W	*	6					
19	1404-503-006-00	PACKING,OIL PUMP	*	1					
20	1560-515-004-50	NUT/M08	*	1					
21	V304-260-008-00	NUT	*	3					
22	V401-160-008-00	WASHER,SP/M 8	*	4					
23	1738-508-230-00	PIPE/DELIVERY/FRONT	*	1					
24	V782-160-000-2T	PLUG/SCREW/SEAL	*	1					
25	V720-112-402-00	O-RING/P20	*	1					
26	V210-560-603-00	BOLT/S	*	4					
27	1675-508-003-00	HOLDER/15	*	2					
28	V211-360-801-60	BOLT,SEMS (SP)	*	1					
29	1738-508-240-00	PIPE/DELIVERY/REAR	*	1					
30	V211-360-801-60	BOLT,SEMS (SP)	*	1					

FIG. 43 PIPING SYSTEM

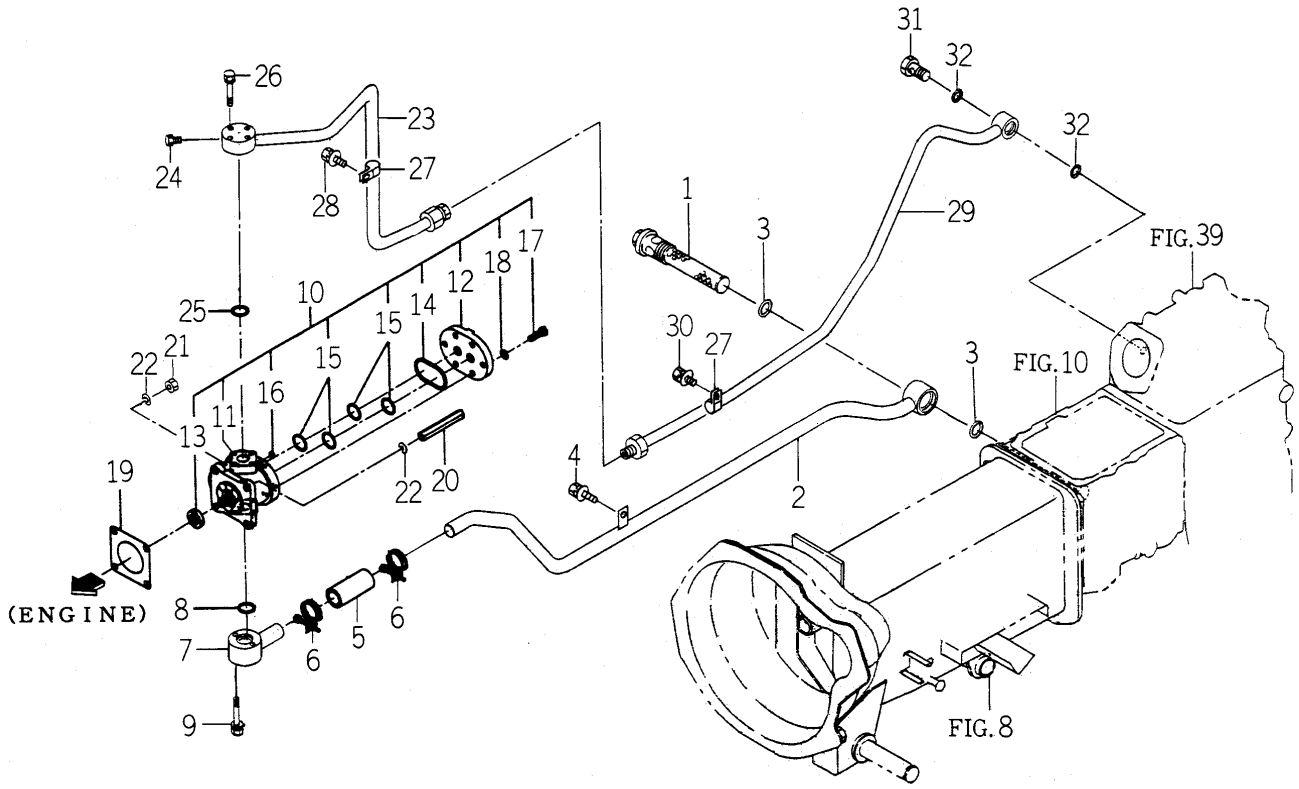

1738-508 -0100

KEY	PART CODE	DESCRIPTION	SPC	TYPE OF MODEL TM3160		ITC	COL	GRP	REMARKS
31	1738-508-001-00	ADAPTER/BOLT/G3/8	*	1					
32	V720-112-401-80	O-RING/P18	*	2					

FIG. 44 LINK (3P) SYSTEM

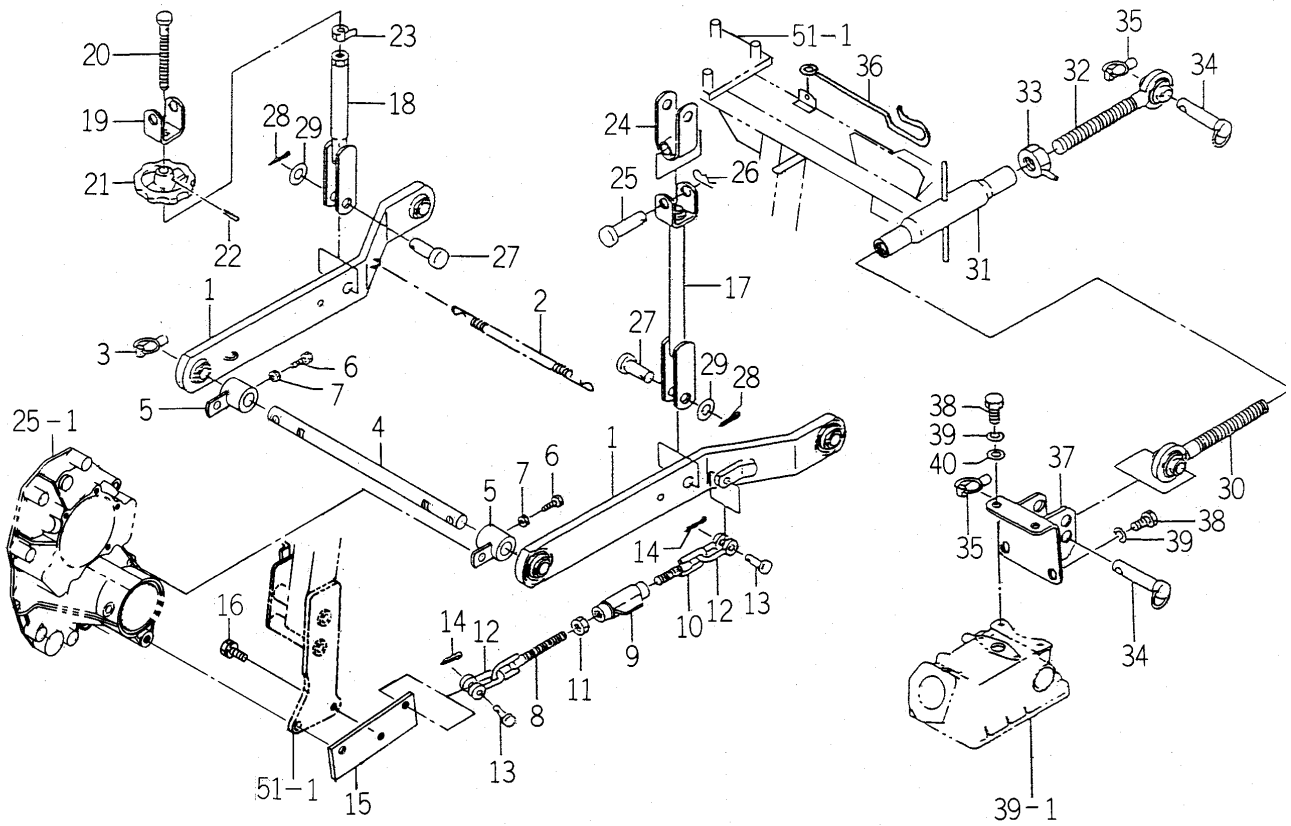

1738-514 -0100

KEY	PART CODE	DESCRIPTION	SPC	TYPE OF MODEL TM3160		ITC	COL	GRP	REMARKS
1	1435-511-250-10	LINK/LOWER COMP	*	2					
2	1560-525-001-40	SPRING	*	1					
3	1673-525-002-20	LINKPIN	*	2					
4	1738-514-001-00	PIN/22X404	*	1					
5	1738-514-210-00	HUB/SPACER COMP	*	2					
6	V201-360-802-50	BOLT/M 8X25	*	2					
7	V305-260-008-00	NUT/M 8	*	2					
8	1435-511-270-00	CHAIN/CHECK/148 COMP	*	2					
9	1427-511-320-00	TURNBUCKLE 12 COMP	*	2					
10	1427-511-220-00	CHAIN,CHECK RH	*	2					
11	V305-260-012-00	NUT/M12	*	2					
12	1427-511-002-00	SHACKLE	*	4					
13	1427-511-001-00	PIN/10X32	*	4					
14	V500-162-502-00	PIN,SPLIT/2.5X20	*	4					
15	1738-514-002-00	STAY/PLATE	*	2					
16	V211-561-003-00	BOLT/M10X30	*	2					
17	1427-511-270-00	ROD/LIFT/LH COMP	*	1					
18	1427-511-290-00	ROD/LIFT/RH COMP	*	1					
19	1427-511-273-00	FORK	*	1					
20	1427-511-003-00	SCREW	*	1					
21	1427-511-004-00	HANDLE/ADJUST	*	1					
22	V580-140-503-20	PIN,SPRING/5 X32 W	*	1					
23	1427-511-280-00	NUT,LOCK/16	*	1					
24	1427-511-300-00	FORK/BRACKET COMP	*	2					
25	1423-520-001-10	PIN/16X63	*	2					
26	1305-931-003-00	PIN,HAIR	*	2					
27	1427-511-005-00	PIN/16X44	*	2					
28	V500-164-002-50	PIN,SPLIT/4 X25	*	2					
29	V411-260-016-00	WASHER / M16	*	2					
30	1427-511-250-10	LINK,TOP LH COMP	*	1					

FIG. 44 LINK (3P) SYSTEM

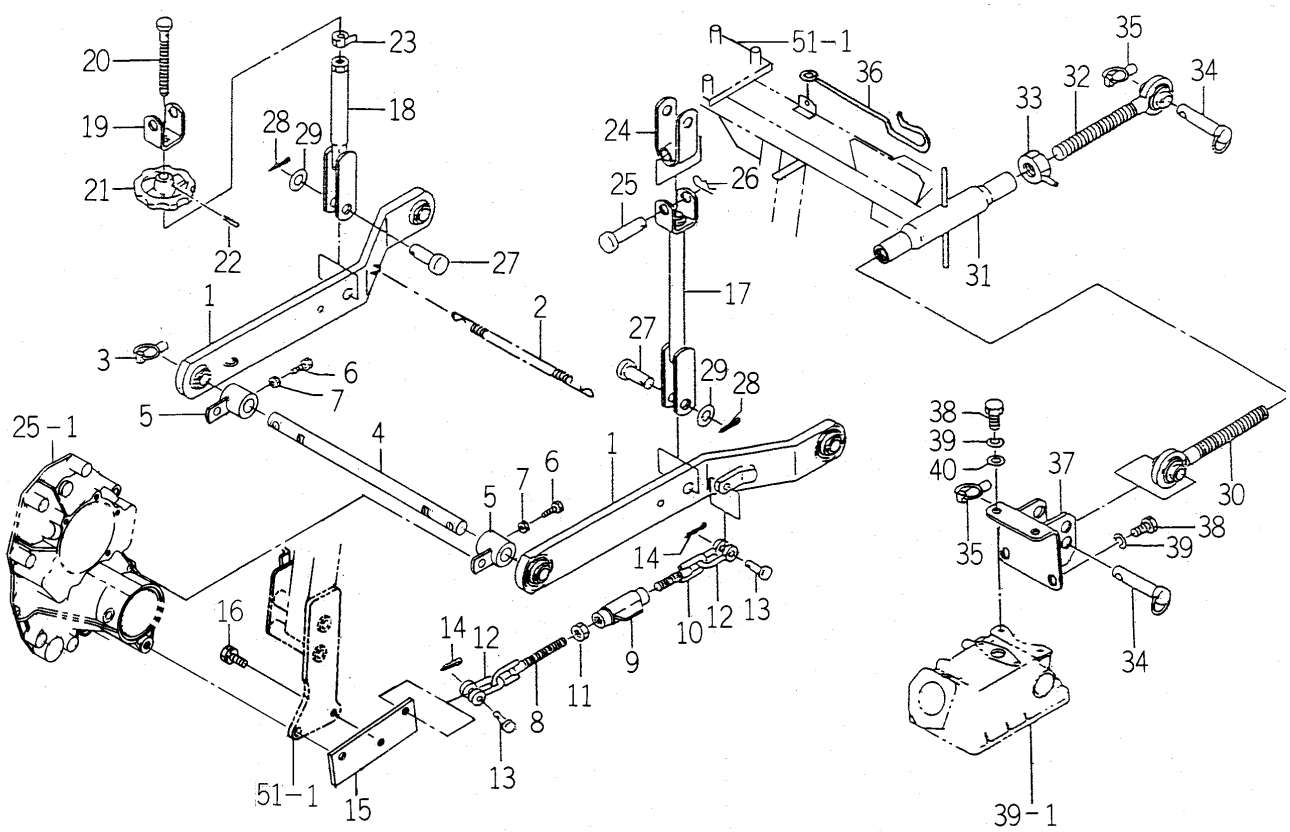

1738-514 -0100

KEY	PART CODE	DESCRIPTION	SPC	TYPE OF MODEL TM3160		ITC	COL	GRP	REMARKS
31	1550-514-290-00	TURNBUCLE COMP	*	1					
32	1568-525-300-10	LINK/TOP/RH COMP	*	1					
33	1402-511-600-00	NUT,TOP LINK LOCK	*	1					
34	1434-511-210-00	PIN,TOP LINK	*	2					
35	1673-525-002-20	LINKPIN	*	2					
36	1566-525-101-00	HOOK,TOP LINK	*	1					
37	1434-511-200-20	LINK BRACKET	*	1					
38	V201-261-203-00	BOLT/M12X30	*	4					
39	V401-160-012-00	WASHER,SP/M12	*	4					
40	V411-260-012-00	WASHER /M12	*	2					

FIG. 45 HITCH (DRAW BAR) SYSTEM (R TYPE)

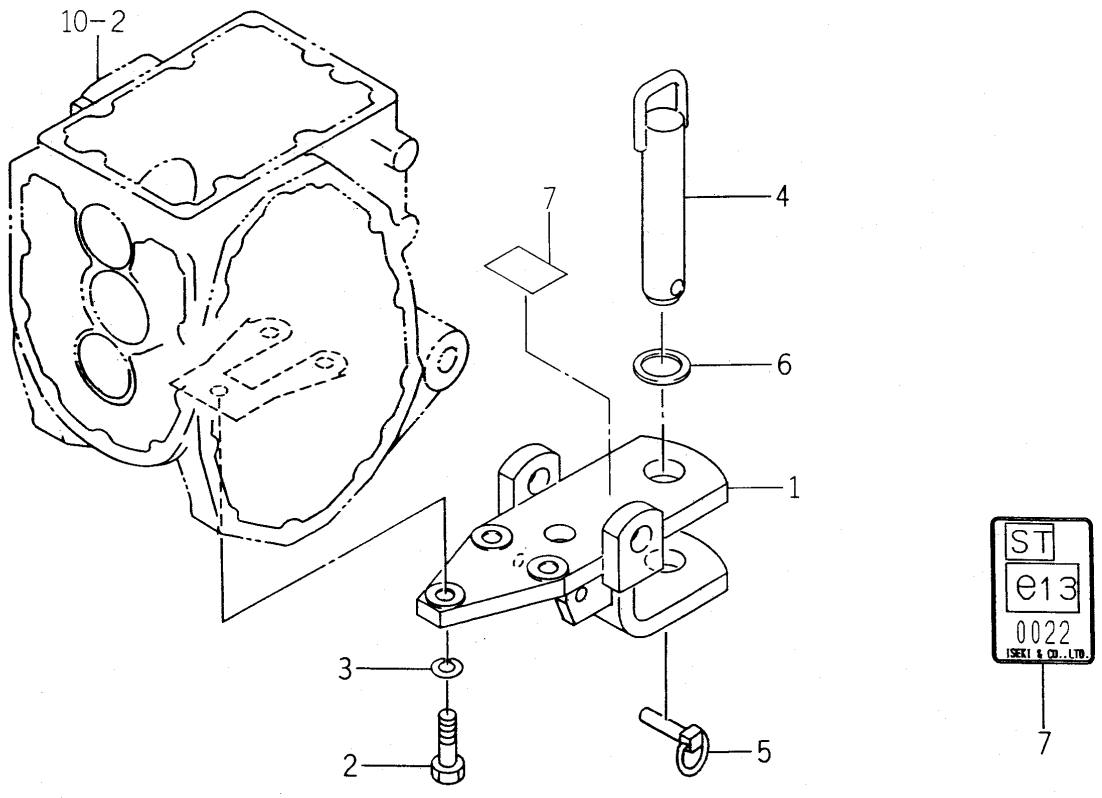

1738-520 -0100

KEY	PART CODE	DESCRIPTION	SPC	TYPE OF MODEL TM3160		ITC	COL	GRP	REMARKS
1	1682-924-220-10	PLATE/HITCH COMP	*	1					
2	V201-361-204-00	BOLT/M12X40	*	3					
3	V401-160-012-00	WASHER,SP/M12	*	3					
4	1674-520-210-00	PIN/30X162 COMP	*	1					
5	1673-525-002-20	LINKPIN	*	1					
6	1674-520-004-00	INSULATOR	*	1					
7	1738-520-001-00	LABEL/DRAWBAR	*	1					

FIG. 46 HOOD SYSTEM(1/2)

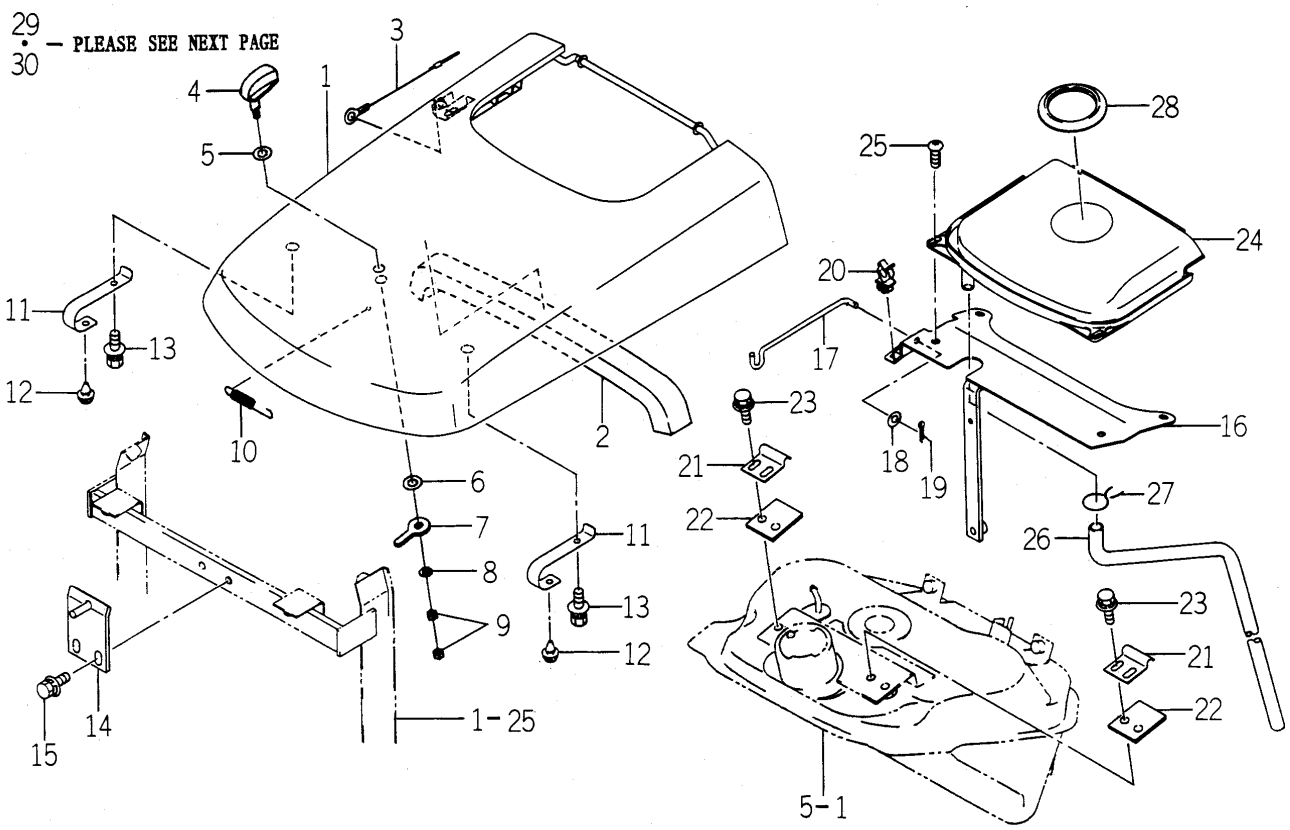

1738-601 -0100

KEY	PART CODE	DESCRIPTION	SPC	TYPE OF MODEL TM3160		ITC	COL	GRP	REMARKS
1	1726-601-200-20	HOOD COMP	*	1			4L		
2	1726-601-007-00	INSULATOR	*	1					
3	1726-601-012-00	CABLE/HOOD COMP	*	1					
4	1675-601-002-00	HANDLE	*	1					
5	1650-601-007-00	WASHER/12X25X02	*	1					
6	3610-440-018-00	WASHER	*	1					
7	1726-601-011-00	ARM/PLATE	*	1					
8	V411-260-008-00	WASHER,PL/M 8	*	1					
9	V304-260-008-00	NUT	*	2					
10	1588-117-001-00	SPRING/HE089	*	1					
11	1726-601-005-00	SPRING/HOOD	*	2					
12	1432-616-002-00	RUBBER,CUSHION	*	2					
13	V211-360-801-60	BOLT,SEMS (SP)	*	2					
14	1726-601-220-00	PLATE/LOCK COMP	*	1					
15	V211-360-801-60	BOLT,SEMS (SP)	*	2					
16	1738-601-210-00	BRACKET COMP	*	1					
17	1726-601-001-00	ROD/HOOD	*	1					
18	V411-260-006-00	WASHER / M6	*	1					
19	V500-162-002-00	PIN,SPLIT/2 X20	*	1					
20	P103-601-005-00	HOLDER/ROD	*	1					
21	1726-601-004-00	HOLDER/HOOD	*	2					
22	1726-601-014-00	PLATE/I/38X60	*	2					
23	V211-360-801-60	BOLT,SEMS (SP)	*	4					
24	1726-601-003-00	HOOD/UPPER	*	1					
25	3676-491-005-00	SCREW/M6X16	*	2					
26	1614-111-002-10	HOSE/03X07X800	*	1					
27		WIRE	*	1					
28	1560-111-003-20	COVER	*	1					
29	1738-601-200-00	COVER/SIDE/LH COMP	*	1			4L		
30	1726-601-008-00	INSULATOR/LH	*	1					

FIG. 46 HOOD SYSTEM(2/2)

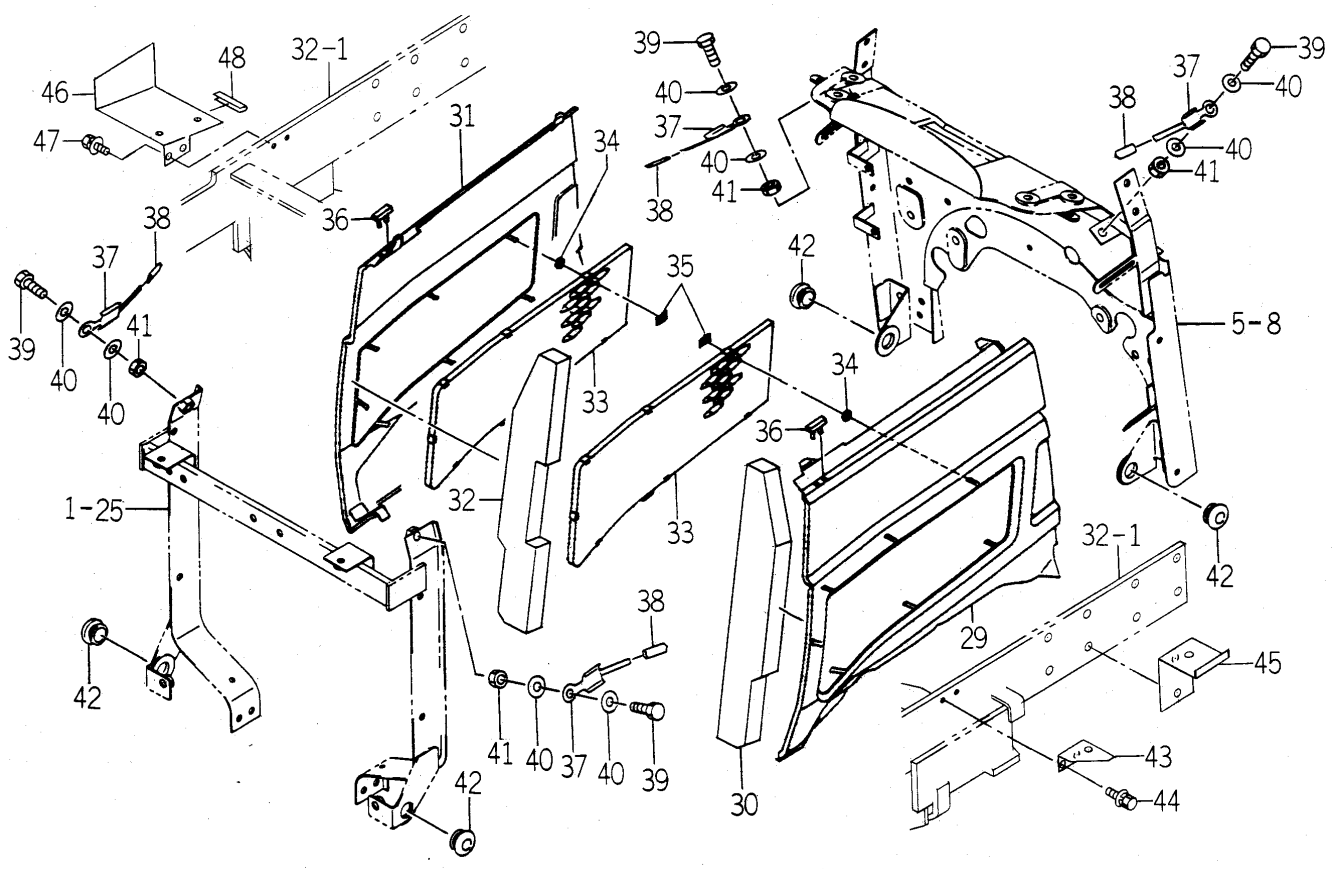

1738-601 -0100

KEY	PART CODE	DESCRIPTION	SPC	TYPE OF MODEL TM3160		ITC	COL	GRP	REMARKS
31	1726-601-240-10	COVER/SIDE/RH COMP	*	1			4L		
32	1726-601-009-00	INSULATOR/RH	*	1					
33	1738-601-001-00	NET/SIDE	*	2					
34	1444-601-015-00	WASHER/6X14X3	*	14					
35	V350-160-006-00	NUT,SPEED/P6	*	14					
36	1716-601-017-00	INSULATOR	*	2					
37	1726-601-006-10	HOLDER/COVER	*	4					
38	1703-313-001-10	CAP/PARKING	*	4					
39	V201-260-802-00	BOLT/M 8X20	*	4					
40	V411-260-008-00	WASHER,PL/M 8	*	8					
41	V304-260-008-00	NUT	*	4					
42	1421-603-004-00	BUSH,LEVER	*	4					
43	1738-601-002-10	COVER/SAFETY/LH/F	*	1					
44	V211-360-801-60	BOLT,SEMS (SP)	*	2					
45	1738-601-003-10	COVER/SAFETY/LH/R	*	1					
46	1738-601-004-20	COVER/SAFETY/RH	*	1					
47	V211-360-801-60	BOLT,SEMS (SP)	*	2					
48	3680-155-005-00	PROTECTOR/040	*	1					

FIG. 47 GRILLE SYSTEM

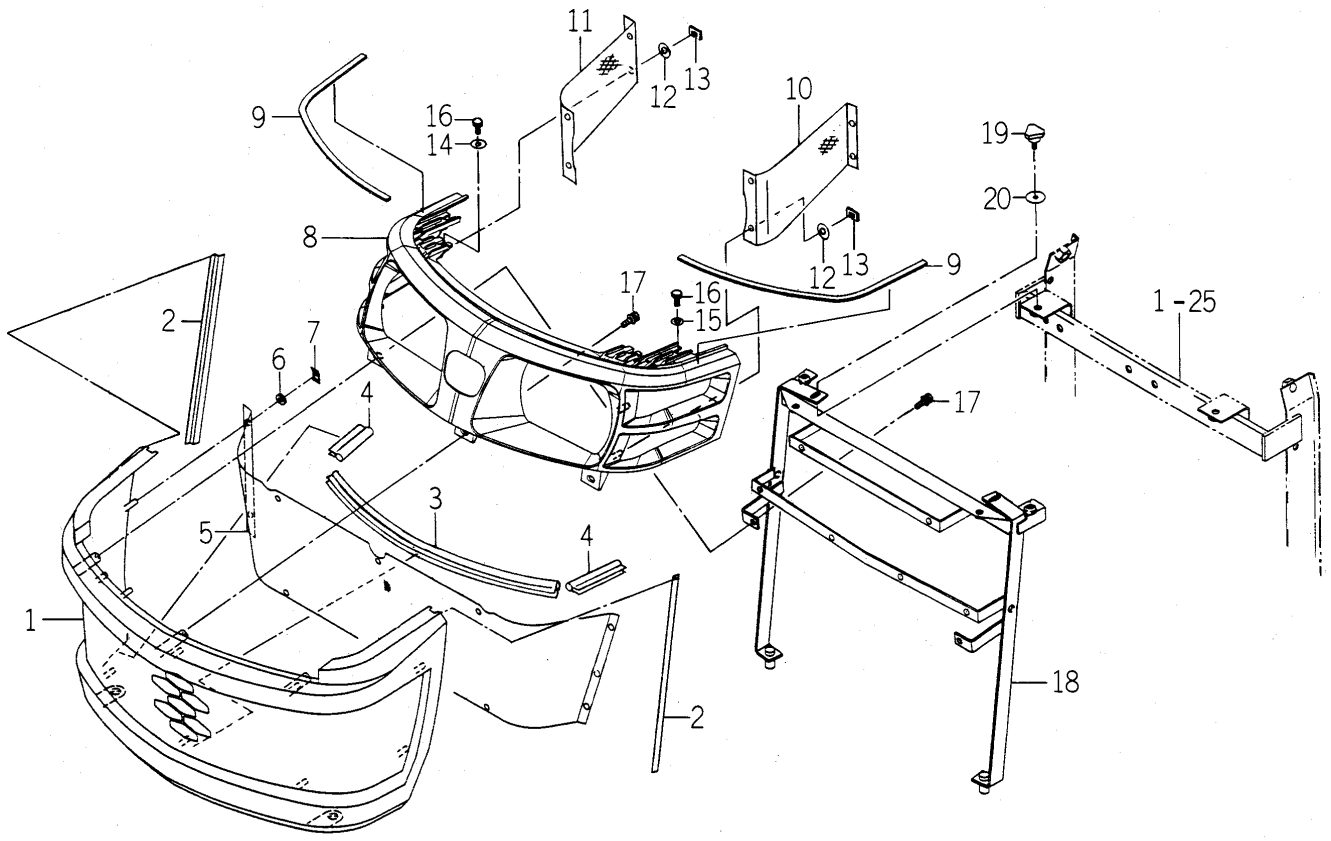

1738-602A-0100

KEY	PART CODE	DESCRIPTION	SPC	TYPE OF MODEL TM3160		ITC	COL	GRP	REMARKS
1	1740-602-056-00	GRILLE	*	1					
2	1716-602-002-10	TRIM/265	*	2					
3	1740-602-057-00	INSULATOR/380	*	1					
4	1675-601-003-00	TRIM/70	*	2					
5	1740-602-051-00	NET/GURILLE	*	1			7F		
6	1444-601-015-00	WASHER/6X14X3	*	10					
7	V350-160-006-00	NUT,SPEED/P6	*	10					
8	1740-602-052-00	HOOD/LAMP	*	1					
9	1614-630-002-00	INSULATOR	*	2					
10	1740-602-053-00	NET/SIDE/LH	*	1					
11	1740-602-054-00	NET/SIDE/RH	*	1					
12	1444-601-015-00	WASHER/6X14X3	*	8					
13	V350-160-006-00	NUT,SPEED/P6	*	8					
14	3740-162-005-00	WASHER	*	2					
15	V411-260-006-00	WASHER	*	2					
16	V200-260-602-00	BOLT/M 6X20	*	4					
17	V210-360-602-00	BOLT/SP	*	3					
18	1740-602-500-00	BRACKET/GRILLE COMP	*	1					
19	1716-601-003-00	BOLT/KNOB/M06X13	*	2					
20	1421-507-014-00	WASHER/6X24X2	*	2					

FIG. 48 STEERING COVER SYSTEM

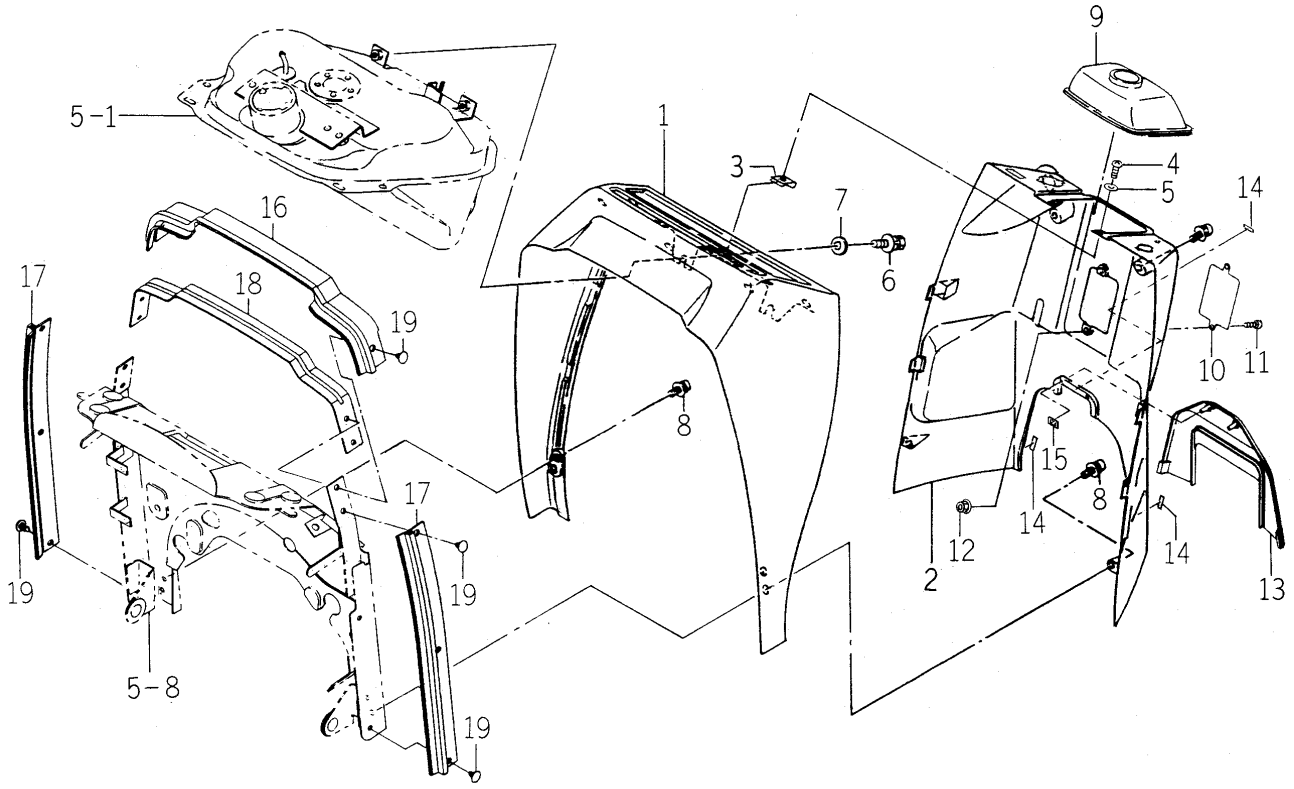

1738-603 -0100

KEY	PART CODE	DESCRIPTION	SPC	TYPE OF MODEL TM3160		ITC	COL	GRP	REMARKS
1	1683-603-004-00	COVER/DUSH/F	*	1					
2	1738-603-001-00	COVER/DUSH/R	*	1					
3	1716-603-005-00	NUT/SPRING	*	2					
4	1560-401-004-40	BOLT/M5X16	*	2					
5	V411-260-006-00	WASHER / M6	*	2					
6	V211-360-801-60	BOLT,SEMS (SP)	*	2					
7	4101-102-038-00	WASHER/24X9X3.2	*	2					
8	V120-376-002-00	SCREW/SP	*	6					
9	1612-603-002-00	BOOT/STEERING	*	1					
10	1709-603-001-00	COVER/PLATE	*	1			5I		
11	V120-376-001-60	SCREW/SP	*	2					
12	V360-260-006-00	NUT/M6	*	2					
13	1717-603-002-00	COVER/DUSH/REAR	*	1					
14	1672-601-001-00	INSULATOR	*	3					
15	V350-160-006-00	NUT,SPEED/P6	*	2					
16	1726-603-004-00	INSULATOR	*	1					
17	1614-603-202-00	INSULATOR	*	2					
18	1614-603-008-00	STAY/INSULATOR	*	1					
19	1527-604-002-00	CLIP(B)	*	8					

FIG. 49 FENDER SYSTEM

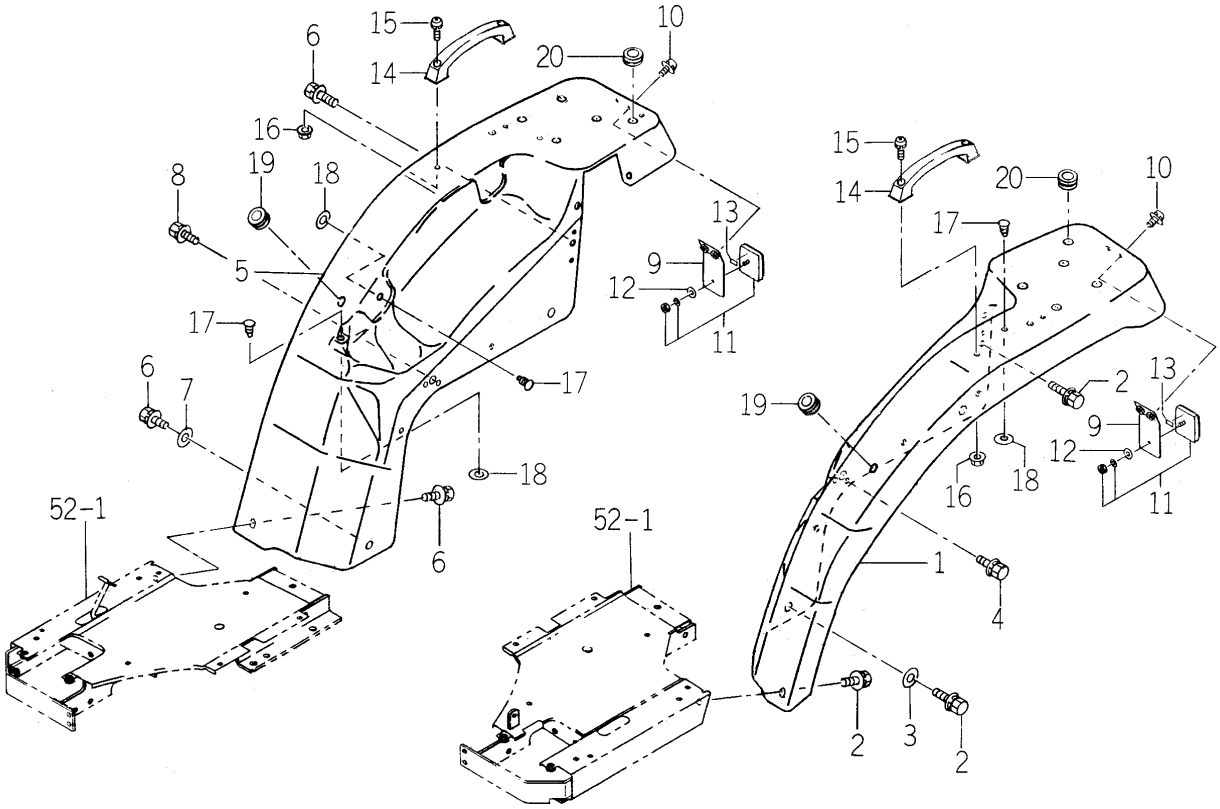

1738-606 -0100

KEY	PART CODE	DESCRIPTION	SPC	TYPE OF MODEL TM3160		ITC	COL	GRP	REMARKS
1	1738-606-230-00	FENDER/LH COMP	*	1			4L		
2	V211-360-802-00	BOLT/SP	*	3					
3	4101-102-038-00	WASHER/24X9X3.2	*	1					
4	V211-360-801-60	BOLT,SEMS (SP)	*	1					
5	1738-606-240-00	FENDER/RH COMP	*	1			4L		
6	V211-360-802-00	BOLT/SP	*	4					
7	4101-102-038-00	WASHER/24X9X3.2	*	1					
8	V211-360-801-60	BOLT,SEMS (SP)	*	1					
9	1738-606-250-00	BRACKET/REFLECTOR	*	2			4L		
10	V120-376-001-60	SCREW/SP	*	4					
11	1674-654-400-00	REFLECTOR ASSY	*	2					
12	V411-260-004-00	WASHER,PL/M 4	*	2					
13	1674-654-004-00	TAPE/10X20	*	2					
14	3670-236-003-00	GRIP	*	2					
15	V120-266-002-00	SCREW,SEMS	*	4					
16	V361-260-006-00	NUT	*	4					
17	1527-604-002-00	CLIP(B)	*	7					
18	V411-260-008-00	WASHER,PL/M 8	*	7					
19	1432-665-014-00	GROMMET/13X17X5	*	2					
20	2142-581-002-00	GROMMET/15	*	2					

FIG. 50 SEAT BASE SYSTEM

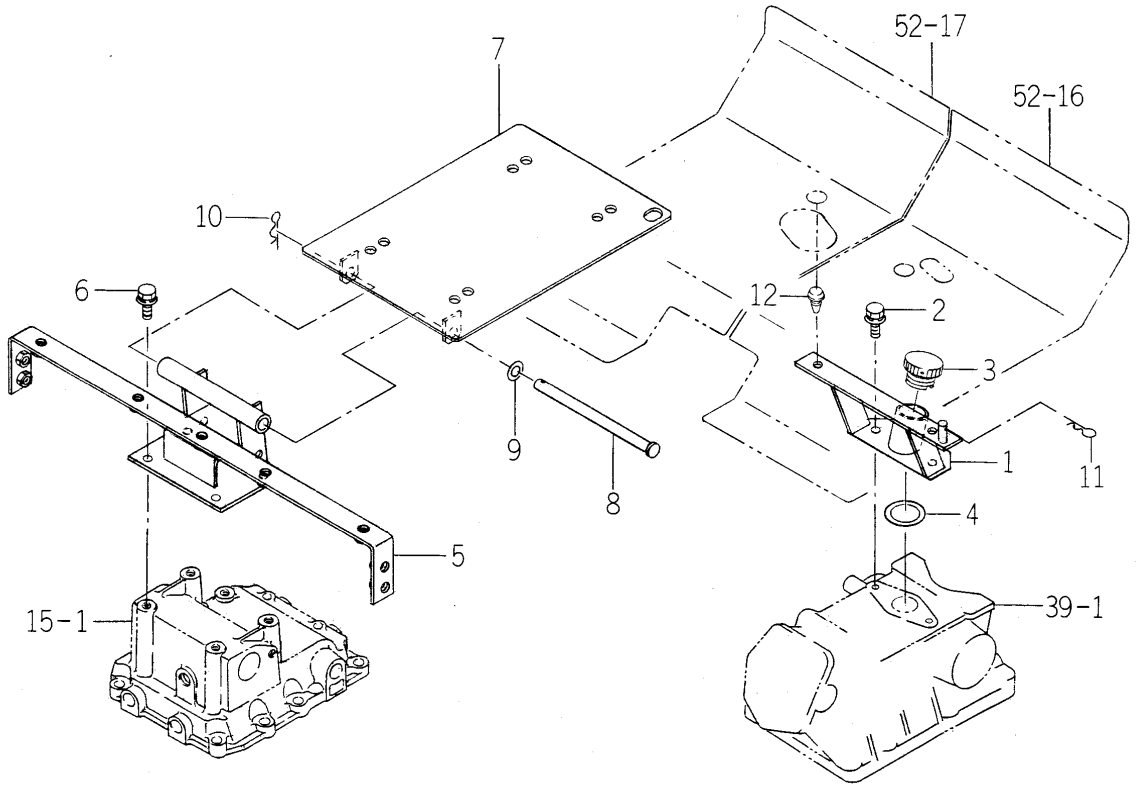

1738-611 -0100

KEY	PART CODE	DESCRIPTION	SPC	TYPE OF MODEL TM3160		ITC	COL	GRP	REMARKS
1	1738-611-200-00	BRACKET/SEAT/R COMP	*	1					
2	V211-360-802-00	BOLT/SP	*	2					
3	1614-501-015-10	CAP/OIL/30	*	1					
4	1427-611-001-00	PACKING/RUBBER	*	1					
5	1738-611-210-10	BRACKET/SEAT/F COMP	*	1					
6	V211-360-802-00	BOLT/SP	*	4					
7	1738-611-220-10	BRACKET/SEAT COMP	*	1					
8	3801-493-003-00	PIN/10X154	*	1					
9	V411-260-010-00	WASHER/M10	*	1					
10	1305-241-001-00	PIN,HAIR	*	1					
11	7957-501-004-00	PIN,HAIR	*	1					
12	1432-616-002-00	RUBBER,CUSHION	*	2					

FIG. 51 FRAME SYSTEM

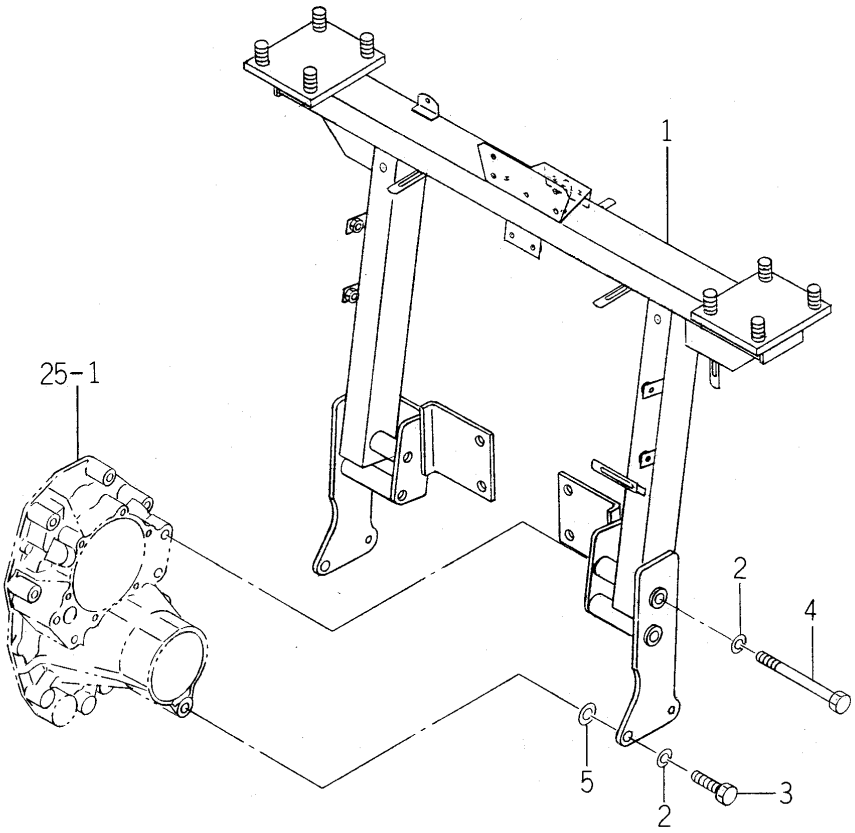

1738-626 -0100

KEY	PART CODE	DESCRIPTION	SPC	TYPE OF MODEL TM3160		ITC	COL	GRP	REMARKS
1	1738-626-200-10	FRAME/REAR COMP	*	1			7F		
2	V401-160-012-00	WASHER,SP/M12	*	6					
3	V201-361-204-50	BOLT/M12X45	*	2					
4	V201-361-213-00	BOLT	*	4					
5	V411-260-012-00	WASHER /M12	*	2					

FIG. 52 STEP SYSTEM

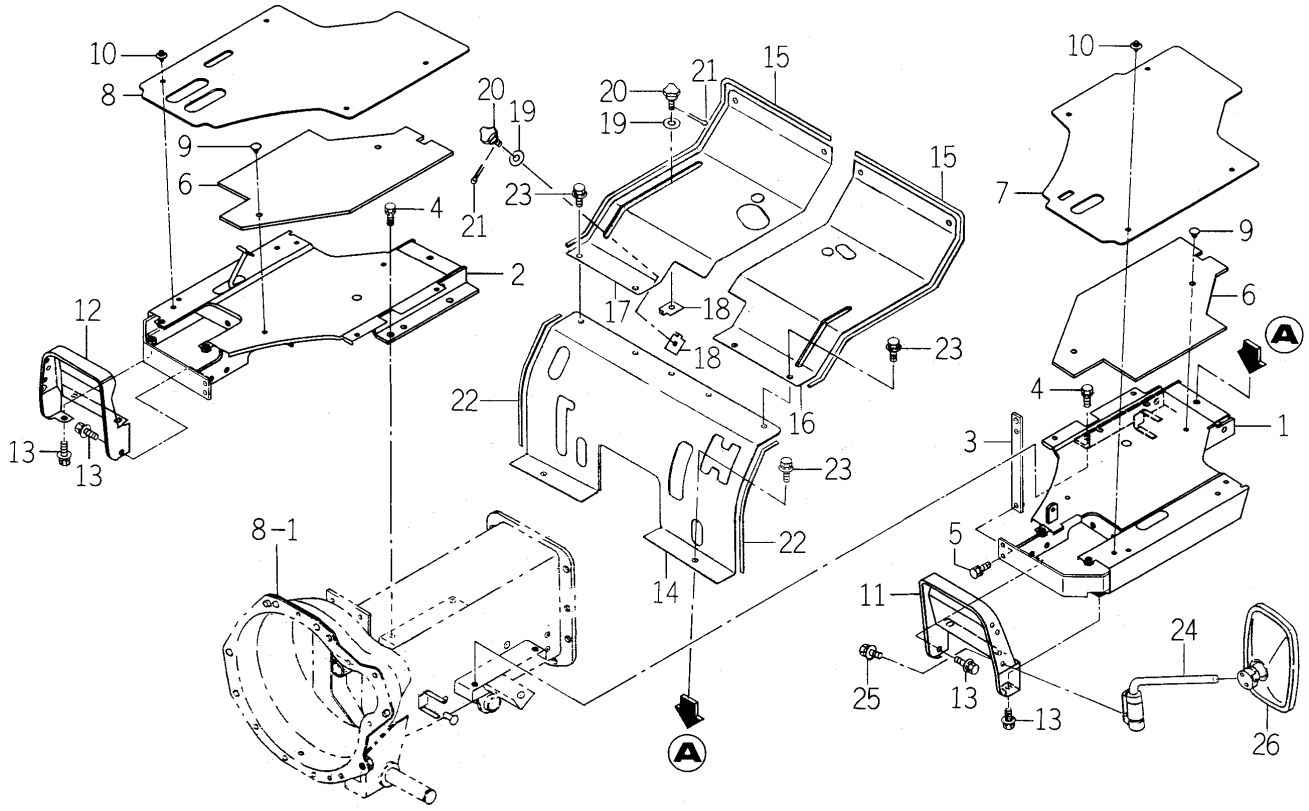

1738-630 -0100

KEY	PART CODE	DESCRIPTION	SPC	TYPE OF MODEL TM3160		ITC	COL	GRP	REMARKS
1	1738-630-200-20	STEP/LH COMP	*	1			5I		
2	1738-630-210-10	STEP/RH COMP	*	1			5I		
3	1726-630-300-10	STAY COMP	*	2					
4	V211-261-002-50	BOLT(S) M10X25	*	4					
5	V211-260-802-50	BOLT/S	*	2					
6	1717-630-004-00	INSULATOR	*	2					
7	1717-630-001-30	MAT/FLOOR/LH	*	1					
8	1717-630-002-10	MAT/FLOOR/RH	*	1					
9	1527-604-002-00	CLIP(B)	*	4					
10	1704-705-003-00	RIVET	*	8					
11	1740-630-054-00	HOOD/LH	*	1			5I		
12	1740-630-055-00	HOOD/RH	*	1			5I		
13	V211-360-802-00	BOLT/SP	*	8					
14	1738-630-001-10	COVER/CHANGE	*	1			5I		
15	1738-630-012-00	TRIM/290	*	2					
16	1738-630-002-10	COVER/LH	*	1			5I		
17	1738-630-003-10	COVER/RH	*	1			5I		
18	1614-608-220-10	PLATE/STOP COMP	*	2					
19	1421-507-014-00	WASHER/6X24X2	*	2					
20	1690-608-003-00	BOLT/KNOB/M06X27	*	2					
21	V500-161-601-50	PIN,SPLIT/1.6X15	*	2					
22	1738-630-011-00	TRIM/715	*	2					
23	V211-360-801-60	BOLT,SEMS (SP)	*	11					
24	1674-619-310-00	ARM/MIRROR ASSY	*	1					
25	V210-360-601-20	BOLT,SEMS	*	2					
26	1674-619-300-10	MIRROR ASSY	*	1					

FIG. 53 LAMP SYSTEM

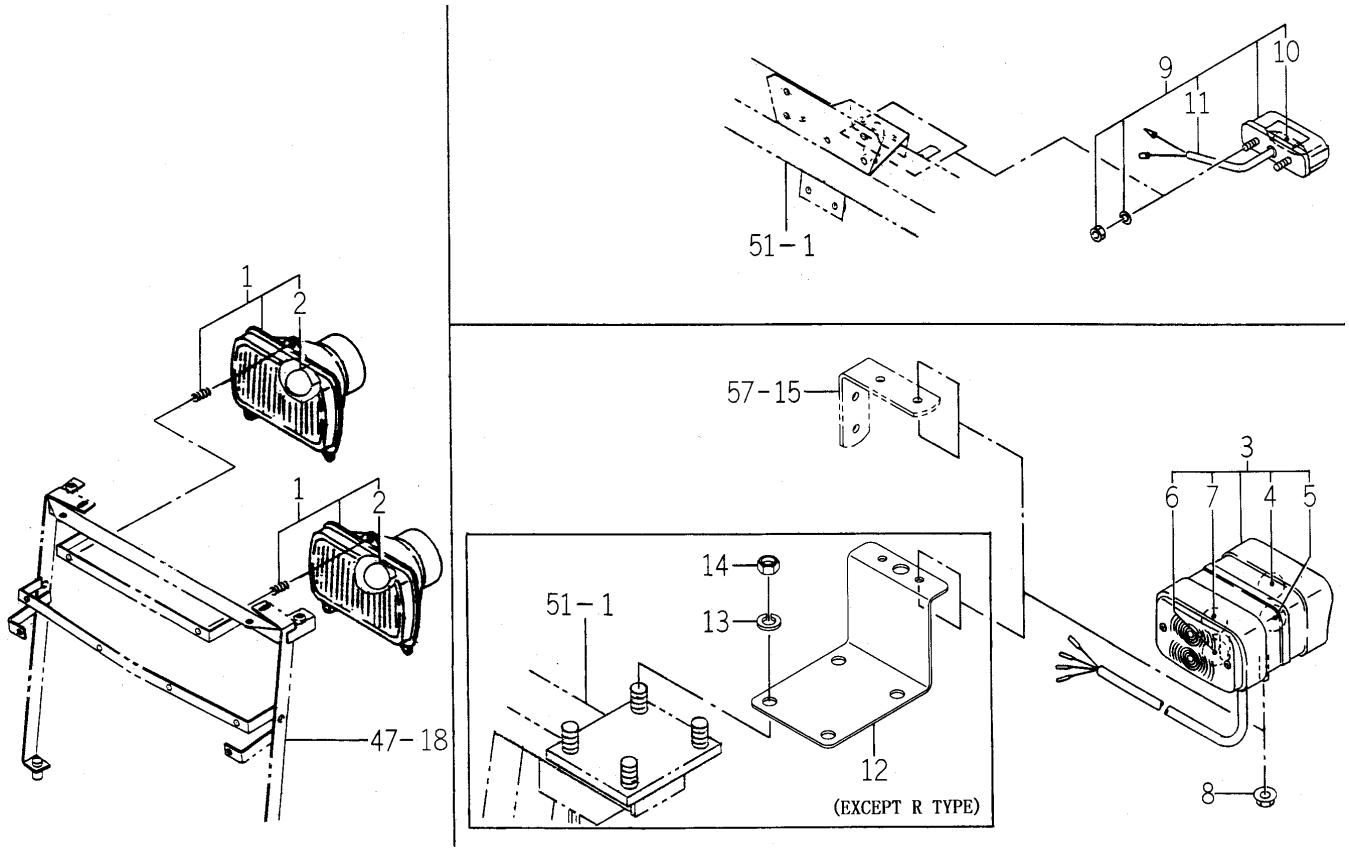

1682-650 -0100,1738-660 -0100,1738-660A-0100

KEY	PART CODE	DESCRIPTION	SPC	TYPE OF MODEL TM3160		ITC	COL	GRP	REMARKS
1	1674-652-200-00	LAMP/HEAD ASSY	*	2					
2	1674-652-202-00	BULB/12V/45/40W	*	2					
3	1739-660-200-10	LAMP/COMBINATIO SET	*	2					
4	1674-654-211-00	BULB/12V21W	*	2					
5	1674-654-212-00	BULB/12V5W	*	2					
6	1674-654-211-00	BULB/12V21W	*	2					
7	1739-660-212-00	BLUB/12V-21/5W	*	2					
8	V362-260-008-00	NUT/WASHER	*	4					
9	1674-654-270-00	LAMP/NUMBERPLAT SET	*	1					
10	1674-654-271-00	BULB/12V/5W	*	1					
11	1674-654-272-00	HARNESS/LAMP	*	1					
12	1738-660-001-00	BRACKET/LAMP	*	2					
13	V401-160-014-00	WASHER,SP/M14	*	8					
14	V304-460-014-00	NUT/M14	*	8					

FIG. 54 PANEL SYSTEM

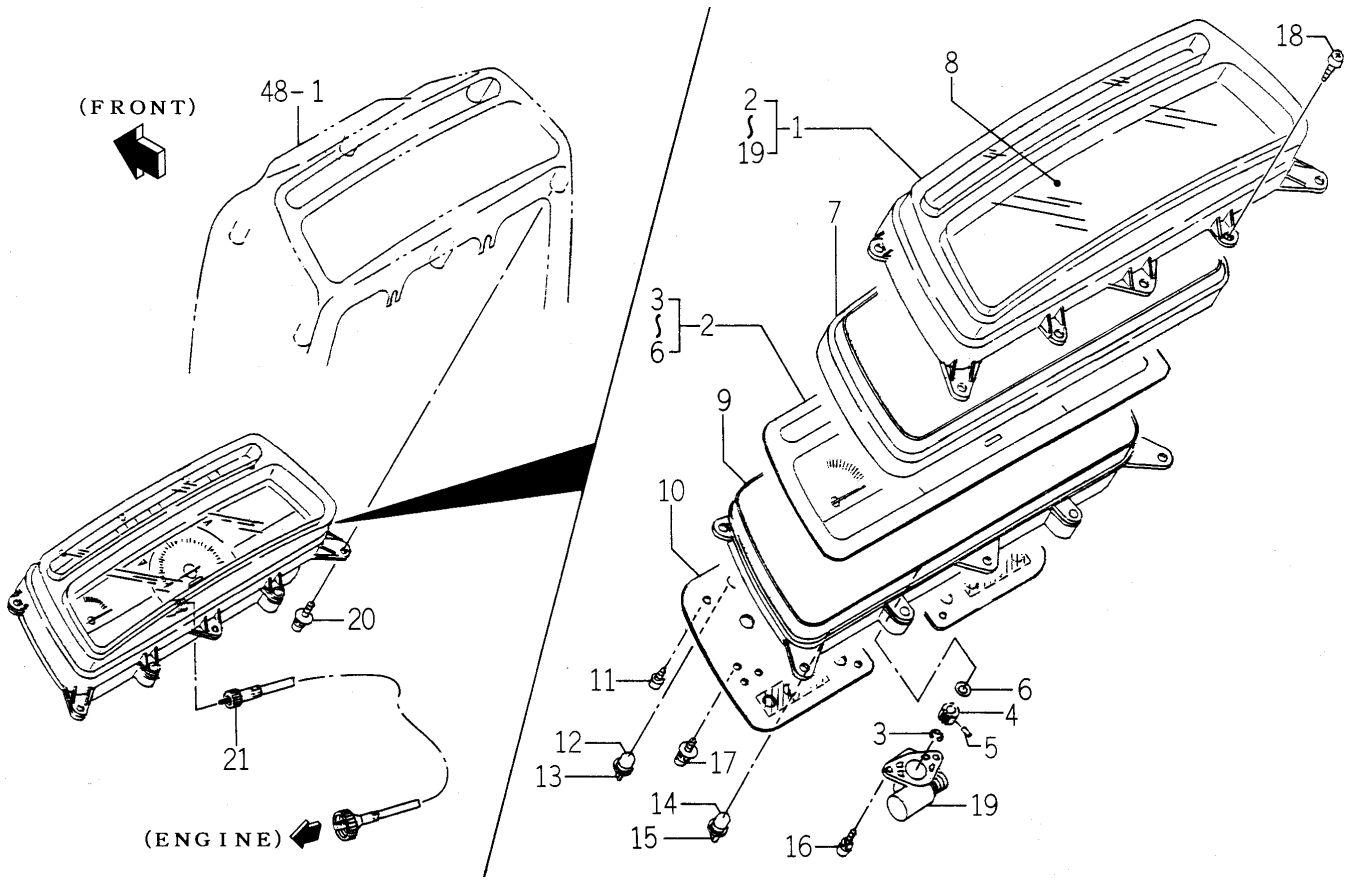

1738-670 -0100

KEY	PART CODE	DESCRIPTION	SPC	TYPE OF MODEL TM3160		ITC	COL	GRP	REMARKS
1	1738-670-210-00	PANEL/INSTRUMEN ASSY	*	1					
2	1738-670-220-00	METER ASSY	*	1					
3	1640-658-322-00	RING/E	*	1					
4	1673-658-214-00	GEAR	*	1					
5	1640-658-324-00	PIN	*	1					
6	1640-658-325-00	WASHER	*	2					
7	1614-670-240-00	ESCUTCHEON	*	1					
8	1614-670-201-00	GLASS	*	1					
9	1614-670-250-00	HOUSING ASSY	*	1					
10	1675-670-220-00	BOARD/WIREING ASSY	*	1					
11	V195-163-010-40	SCREW/TAPPING	*	5					
12	3650-270-214-00	BULB	*	10					
13	1560-658-282-40	SOCKET	*	10					
14	1614-670-281-00	BULB/LAMP/12V/1.7W	*	4					
15	1560-658-282-40	SOCKET	*	4					
16	V120-264-001-20	BOLT/M4X12	*	2					
17	1560-658-202-00	SCREW	*	3					
18	V195-164-016-40	SCREW/4X16	*	4					
19	1675-670-230-00	CASE ASSY	*	1					
20	V120-366-001-60	SCREW	*	4					
21	1614-670-001-10	CABLE ASSY	*	1					

FIG. 55 SWITCH SYSTEM

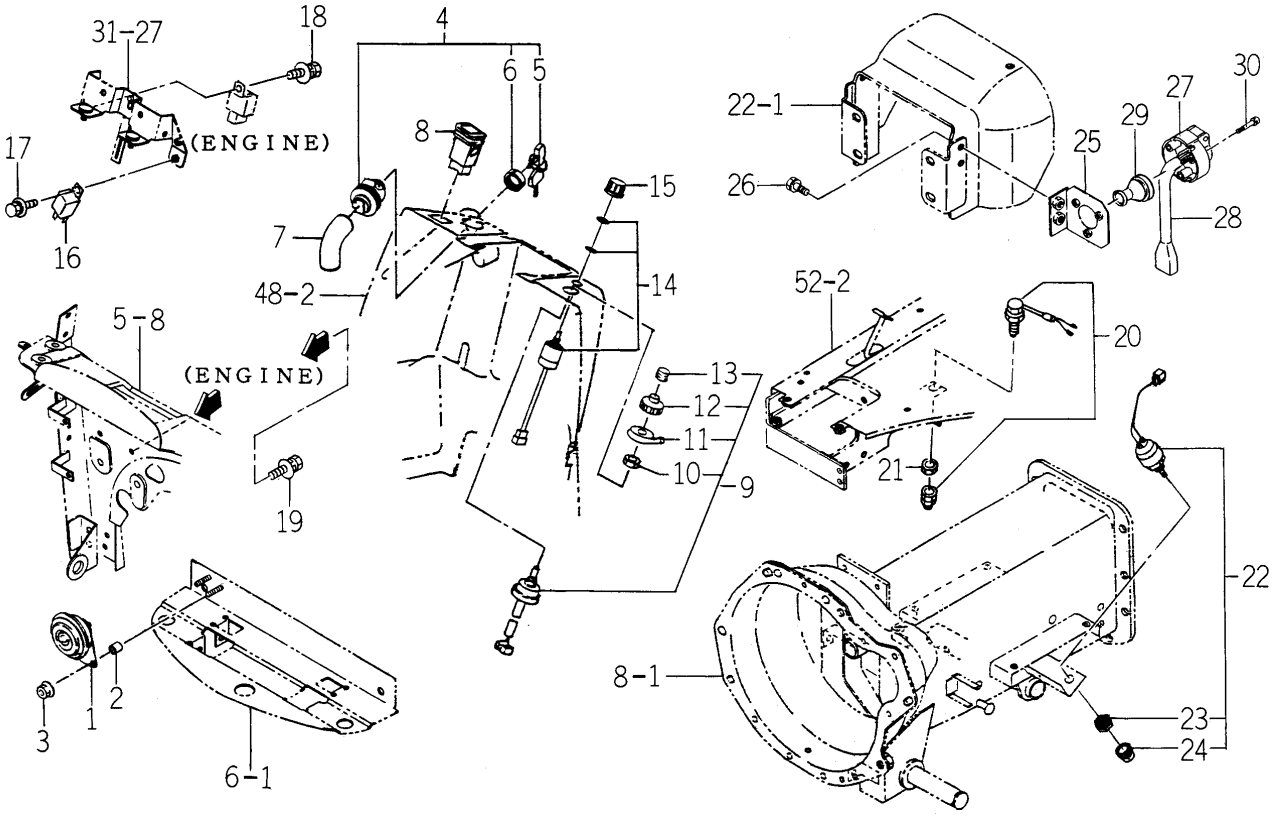

1738-680 -0100

KEY	PART CODE	DESCRIPTION	SPC	TYPE OF MODEL TM3160		ITC	COL	GRP	REMARKS
1	1740-680-530-00	HORN ASSY	*	1					
2	2150-661-002-00	COLLAR	*	2					
3	V360-260-006-00	NUT/M6	*	2					
4	1716-680-200-10	SWITCH/MAIN ASSY	*	1					
5	2186-536-211-00	KEY	*	2					
6	2186-536-212-00	NUT/RING	*	1					
7	1716-680-006-00	COVER/SWITCH	*	1					
8	1740-680-550-00	SWITCH/HAZARD ASSY	*	1					
9	1544-623-001-00	SWITCH ASSY	*	1					
10	1544-623-232-00	NUT/M22	*	1					
11	1544-623-233-00	LEVER	*	1					
12	1544-623-234-00	KNOB	*	1					
13	1544-623-235-00	BOOT/HORN	*	1					
14	1614-680-220-00	SWITCH/ROTARY/2 ASSY	*	1					
15	1588-651-205-00	KNOB	*	1					
16	1600-623-002-00	FLASHER ASSY	*	1					4DM0-033-600-01
17	V210-360-601-60	BOLT(SP)/M6X16	*	1					
18	V210-360-601-60	BOLT(SP)/M6X16	*	1					
19	V210-360-602-50	BOLT/SP	*	2					
20	1518-621-320-00	SWITCH,STOP	*	1					
21	V335-260-012-00	NUT	*	1					
22	1560-664-250-00	SWITCH/PUSH SET	*	1					
23	1560-664-252-00	NUT	*	1					
24	1560-664-253-00	BOOT	*	1					
25	1682-690-370-10	BRACKET/COUPLER/7P	*	1					
26	V211-261-003-50	BOLT,SEMS	*	2					
27	1600-624-201-00	PLUG/7P	*	1					8JB0-019-430-01
28	1682-690-380-00	HARNESS/SOCKET ASSY	*	1					
29	1650-654-036-00	GROMMET/10X40X03	*	1					
30	V120-265-003-00	BOLT/M5X30	*	3					

FIG. 56 HARNESS SYSTEM

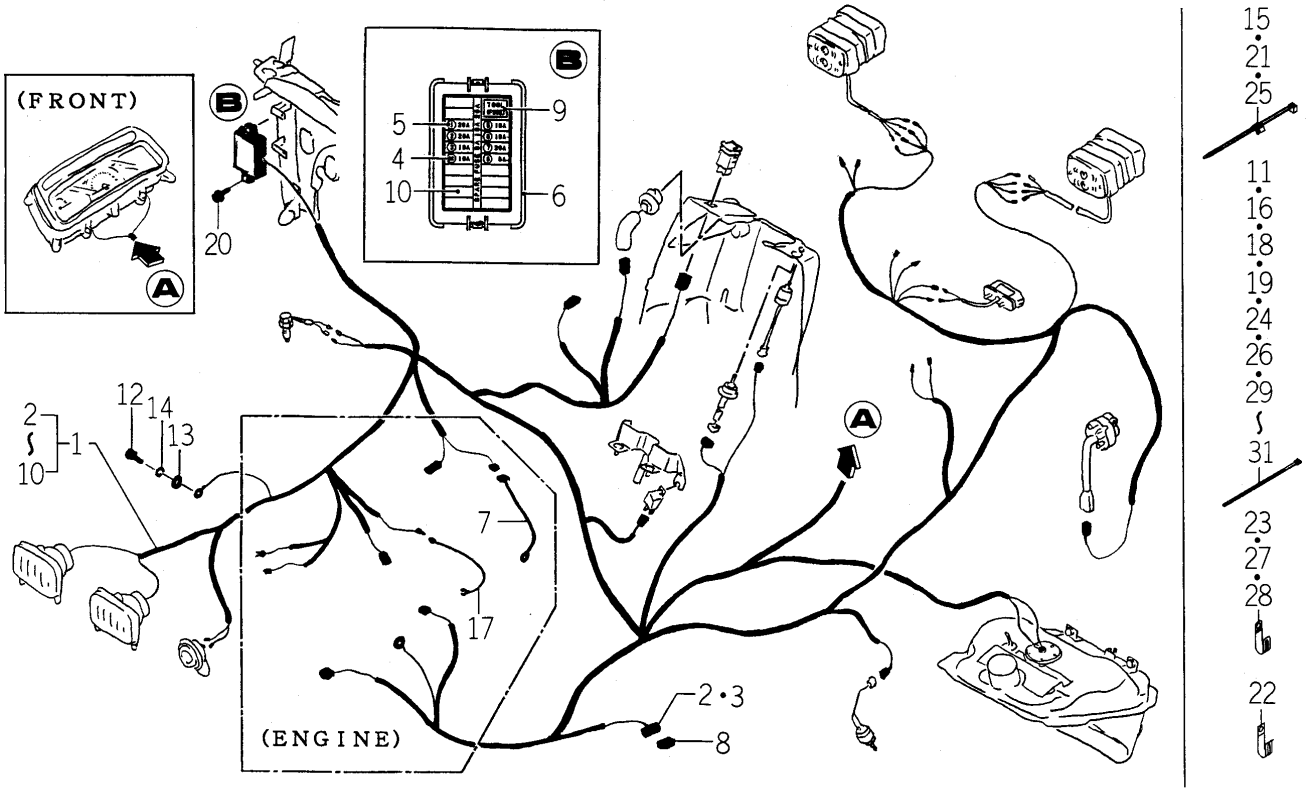

1738-690 -0100

KEY	PART CODE	DESCRIPTION	SPC	TYPE OF MODEL TM3160		ITC	COL	GRP	REMARKS
1	1738-690-200-00	HARNESS/MAIN/E4 ASSY	*	1					
2	1716-690-502-00	FUSE/SLOWBLOW/30A	*	1					
3	1650-650-222-00	FUSE/SLOWBLOW	*	1					
4	3821-262-202-00	FUSE/BLADE/32V10A	*	5					
5	3821-262-204-00	FUSE/BLADE/32V20A	*	4					
6	3827-270-001-00	COVER/FUSE	*	1					
7	1710-690-502-00	HARNESS/EARTH	*	1					
8	1738-690-202-00	RABEL/FUSE/SLOWBLOW	*	1					
9	3827-270-002-00	TOOL/FUSE	*	1					
10	1738-690-203-00	LABEL/FUSE/E4	*	1					
11	1376-402-003-00	BAND,WIRE/140	*	1					
12	V201-261-001-60	BOLT/M10X16	*	1					
13	V411-260-010-00	WASHER/M10	*	1					
14	V401-160-010-00	WASHER,SP/M10	*	1					
15	1560-666-004-00	BAND	*	1					
16	1376-402-003-00	BAND,WIRE/140	*	1					
17	1600-624-004-00	HARNESS,OIL PRESSURE	*	1					
18	1342-402-006-00	BAND,WIRE/250	*	1					
19	1376-402-003-00	BAND,WIRE/140	*	1					
20	V210-360-601-60	BOLT(SP)/M6X16	*	2					
21	1560-666-004-00	BAND	*	1					
22	1425-621-004-00	HOLDER/JE/9-9	*	1					
23	3737-172-011-00	CLAMP,HARNESS	*	1					
24	1376-402-003-00	BAND,WIRE/140	*	1					
25	1560-666-004-00	BAND	*	3					
26	1376-402-003-00	BAND,WIRE/140	*	1					
27	3737-172-011-00	CLAMP,HARNESS	*	1					
28	3737-172-011-00	CLAMP,HARNESS	*	1					
29	1376-402-003-00	BAND,WIRE/140	*	2					
30	1342-402-006-00	BAND,WIRE/250	*	2					

FIG. 56 HARNESS SYSTEM

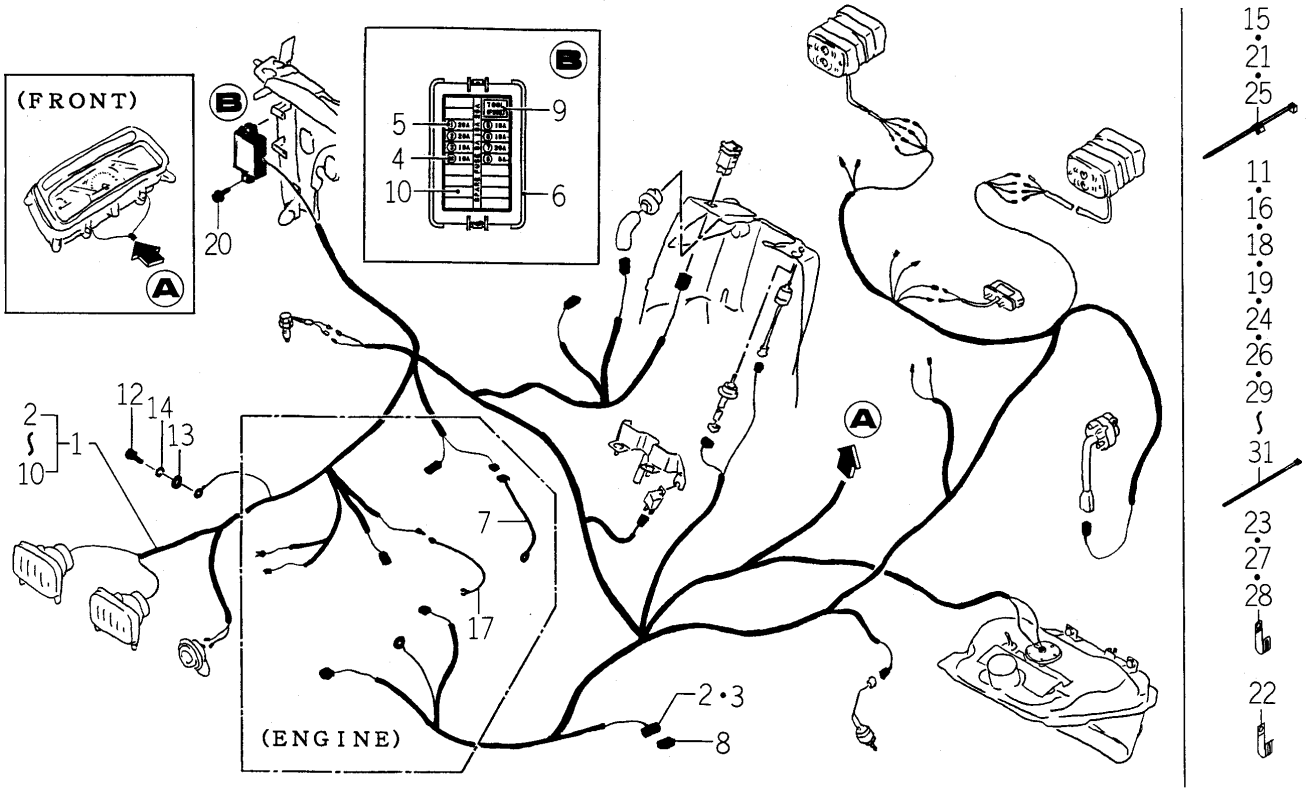

1738-690 -0100

KEY	PART CODE	DESCRIPTION	SPC	TYPE OF MODEL TM3160		ITC	COL	GRP	REMARKS
31	1376-402-003-00	BAND,WIRE/140	*	1					

FIG. 57 ROPS SYSTEM (R TYPE)

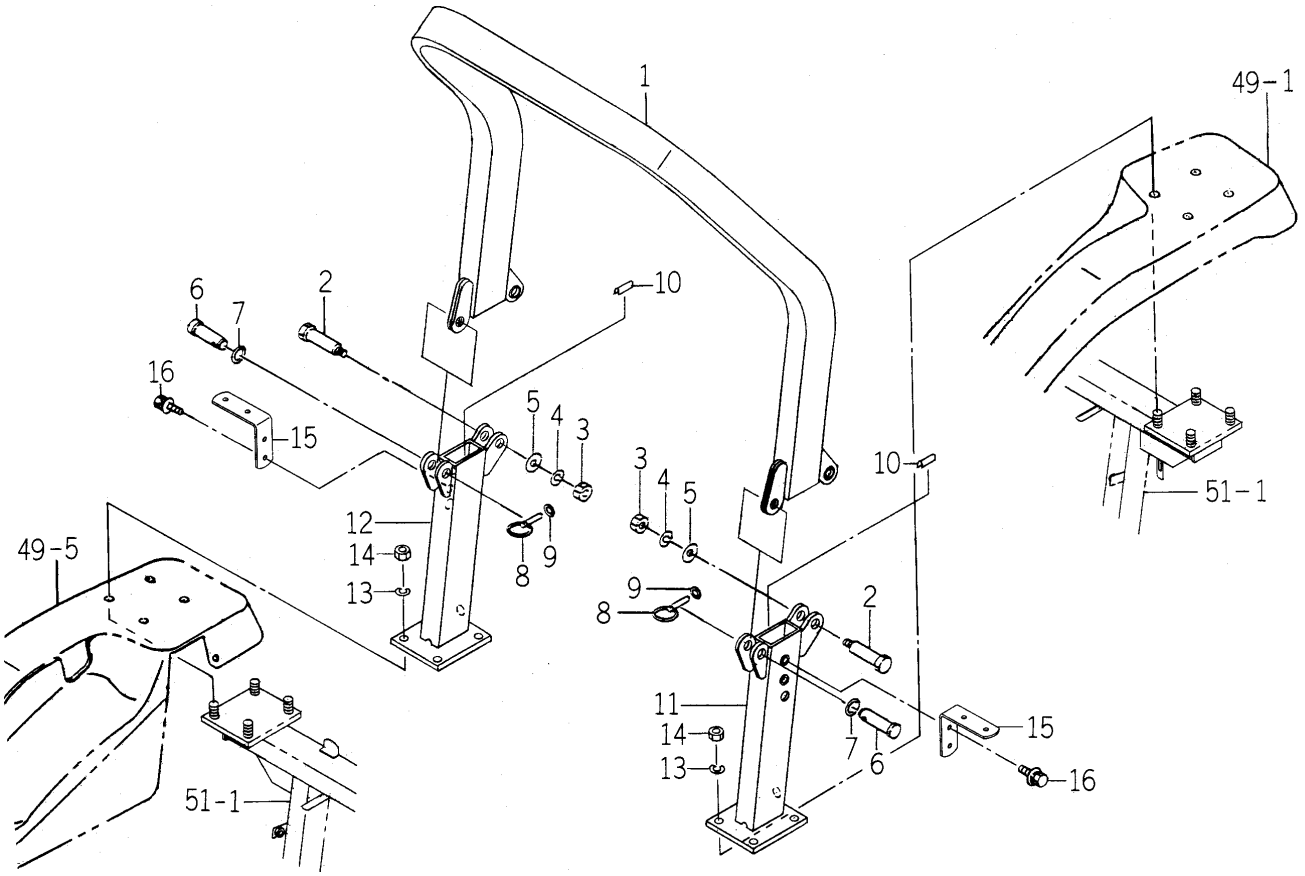

1738-702 -0100

KEY	PART CODE	DESCRIPTION	SPC	TYPE OF MODEL TM3160		ITC	COL	GRP	REMARKS
1	1738-702-300-00	FRAME/UPPER COMP	*	1			7F		
2	1640-702-003-00	BOLT/SET/M16X60	*	2					
3	V304-260-016-00	NUT/M16	*	2					
4	V401-160-016-00	WASHER,SP/M16	*	2					
5	V411-260-016-00	WASHER / M16	*	2					
6	1640-702-004-00	PIN/20X58	*	2					
7	V720-112-401-80	O-RING/P18	*	2					
8	1673-525-002-20	LINKPIN	*	2					
9	V720-101-900-90	O-RING/P 9	*	2					
10	1560-314-001-00	INSULATOR	*	2					
11	1738-702-310-00	FRAME/LH COMP	*	1			7F		
12	1738-702-320-00	FRAME/RH COMP	*	1			7F		
13	V401-160-014-00	WASHER,SP/M14	*	8					
14	V304-460-014-00	NUT/M14	*	8					
15	1739-702-001-00	PLATE/L/38X114	*	2					
16	V211-360-802-00	BOLT/SP	*	4					

FIG. 58 ORNAMENT,LABEL

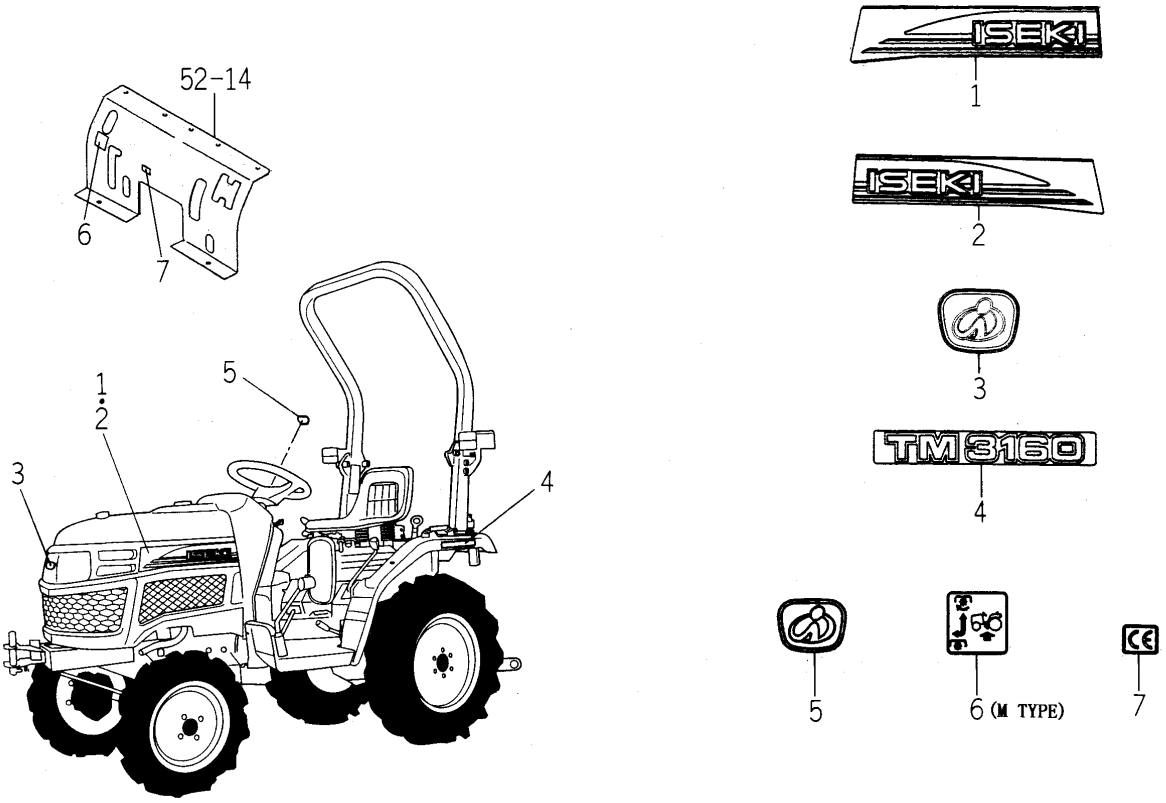

1738-901 -0100,1709-903B-0100,1709-905 -0100

KEY	PART CODE	DESCRIPTION	SPC	TYPE OF MODEL TM3160		ITC	COL	GRP	REMARKS
1	1738-901-001-00	ORNAMENT/ISEKI/LH	*	1					
2	1738-901-002-00	ORNAMENT/ISEKI/RH	*	1					
3	1118-901-002-00	ORNAMENT/I	*	1					
4	1738-901-003-00	ORNAMENT/3160	*	2					
5	2161-331-001-00	ORNAMENT/I/STEERING	*	1					
6	1682-902-008-00	LABEL/PTO/MID	*	1					
7	2500-901-027-00	LABEL/CE	*	1					

FIG. 59 LABEL (CONTROL)

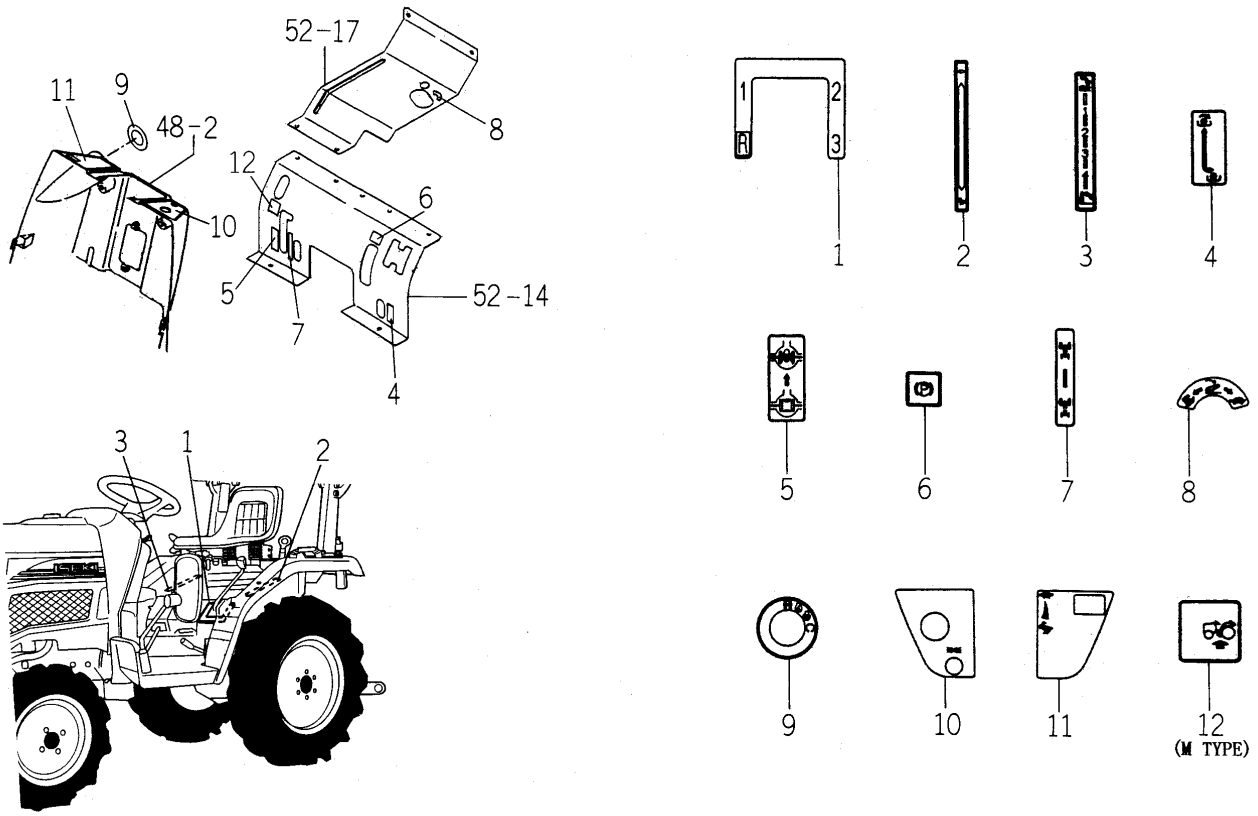

1738-902 -0100,1738-902B-0100

KEY	PART CODE	DESCRIPTION	SPC	TYPE OF MODEL TM3160		ITC	COL	GRP	REMARKS
1	1682-902-005-00	LABEL/CONTROL/MAIN	*	1					
2	1738-902-003-00	LABEL/CONTROL/SUB	*	1					
3	1600-902-002-10	LABEL,CONTROL	*	1					
4	1682-902-009-00	LABEL/CONTROL/PTO	*	1					
5	1683-902-004-00	LABEL/DIFF	*	1					
6	1682-902-014-00	LABEL/CONTROL/PARKIN	*	1					
7	1600-904-051-00	LABEL/4WD	*	1					
8	1682-902-013-00	LABEL/CONTROL/ADJUST	*	1					
9	1740-903-055-10	LABEL/SWITCH/MAIN	*	1					
10	1740-903-053-00	LABEL/COLUMN/LH	*	1					
11	1738-902-006-00	LABEL/COLUMN/RH	*	1					
12	1738-902-007-00	LABEL/PTO/MID	*	1					

FIG. 60 LABEL (CAUTION)

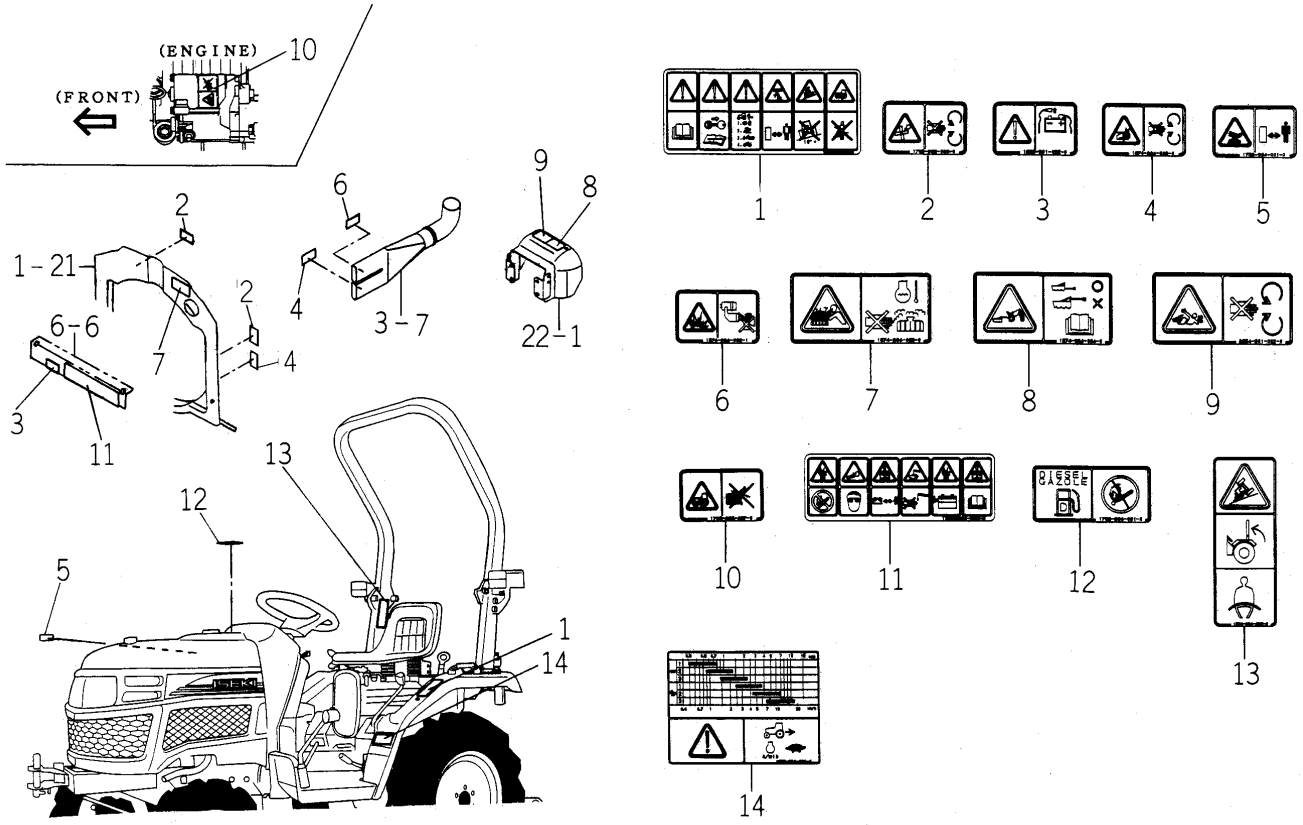

1738-904 -0100

KEY	PART CODE	DESCRIPTION	SPC	TYPE OF MODEL TM3160		ITC	COL	GRP	REMARKS
1	1674-904-001-00	LABEL/DRIVE	*	1					
2	1705-902-006-00	LABEL/W/FAN	*	2					
3	1636-901-022-00	LABEL/CAUTION/BATTER	*	1					
4	1674-904-008-00	LABEL/WARNING/BELT	*	2					
5	1739-904-001-00	LABEL/WARNING/HOT	*	1					
6	1674-904-002-10	LABEL/ETHER	*	1					
7	1674-904-003-00	LABEL/RADIATOR	*	1					
8	1674-904-004-00	LABEL/TRAILER	*	1					
9	8654-901-002-00	LABEL/PTO	*	1					
10	1705-902-007-00	LABEL/W/STARTER	*	1					
11	1705-904-002-00	LABEL/BATTERY	*	1					
12	1705-904-001-00	LABEL/FUEL	*	1					
13	1674-904-005-00	LABEL/ROPS	*	1					
14	1738-904-001-00	LABEL/SPEED	*	1					

FIG. 61 TOOLS

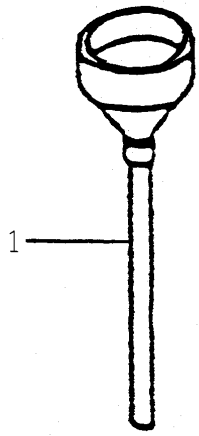

1738-910 -0100

KEY	PART CODE	DESCRIPTION	SPC	TYPE OF MODEL TM3160		ITC	COL	GRP	REMARKS
1	2188-973-200-00	FUNNEL ASSY	*	1					

FIG. 62 MID PTO SET (EXCEPT M TYPE)(1/2) (OPTION)

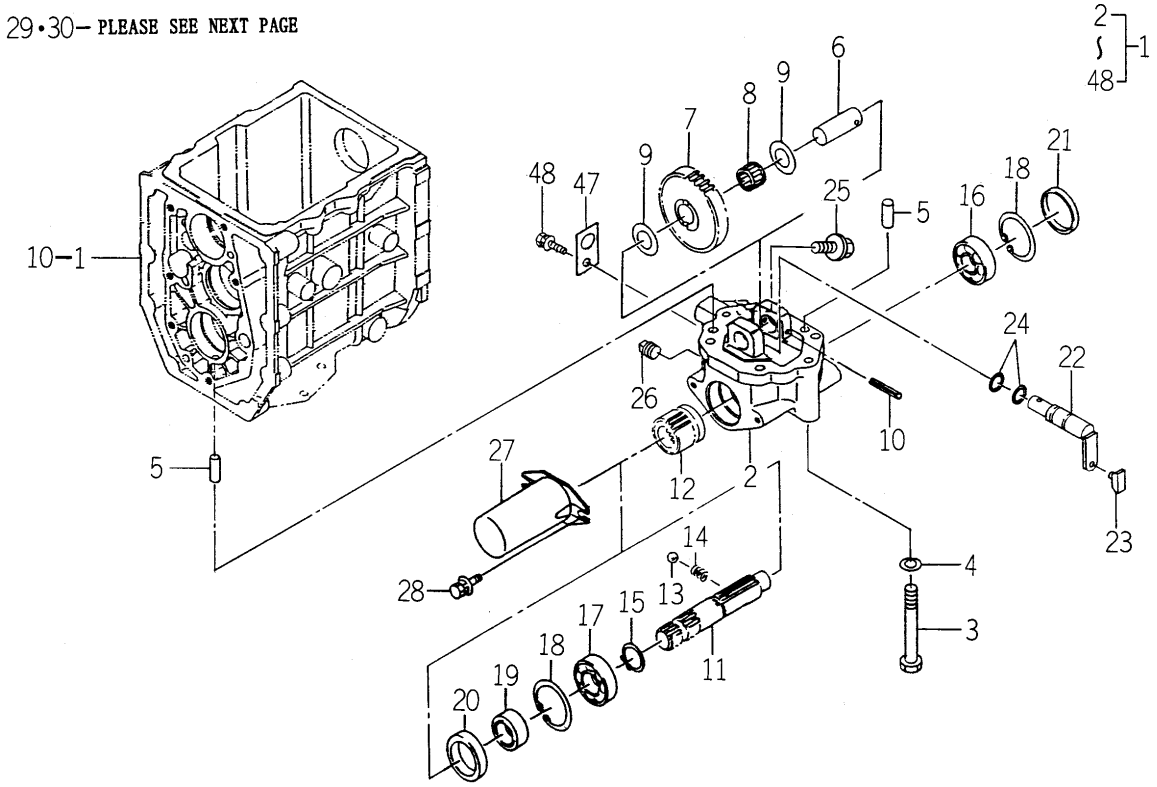

1738-255A-0100

KEY	PART CODE	DESCRIPTION	SPC	TYPE OF MODEL TM3160		ITC	COL	GRP	REMARKS
1	1738-255-200-10	PTO/MID SET	T	1					
2	1682-255-201-10	CASE/PTO/MID	T	1					
3	V201-361-009-00	BOLT/M10X90	T	6					
4	V401-160-010-00	WASHER,SP/M10	T	6					
5	V523-101-002-40	PIN	T	2					
6	1682-255-203-00	PIN/20X51	T	1					
7	1682-255-202-00	GEAR/SPUR/34	T	1					
8	1682-255-002-20	BEARING/NEEDLE	T	1					
9	1480-212-003-00	COLLAR/21X36X1	T	2					
10	V580-140-604-00	PIN,SPRING/6 X40 W	T	1					
11	1682-255-204-00	SHAFT/PTO/MID	T	1					
12	1682-255-205-10	GEAR/SPUR/15	T	1					
13	V682-200-001-00	BALL	T	1					
14	1302-225-003-00	SPRING,SHIFTER	T	1					
15	V704-140-025-00	RING,SNAP/25 C	T	1					
16	V600-110-630-40	BEARING,RB/6304	T	1					
17	V600-110-620-50	BEARING,RB/6205	T	1					
18	V705-140-052-00	RING,SNAP/52 C	T	2					
19	1427-212-003-20	SLEEVE	T	1					
20	V744-135-520-80	SEAL,OIL/TC35528	T	1					
21	3625-701-003-00	CAP,BLANK/52	T	1					
22	1682-255-210-40	ARM/SHIFT/MID COMP	T	1					
23	2703-101-020-00	COLLAR,SHIFTER	T	1					
24	V720-102-401-40	O-RING/P14	T	2					
25	V233-361-201-60	FLANGEBOLT	T	1					
26	V781-160-000-6B	PLUG/SCREW/SEAL	T	1					
27	1444-314-009-10	CAP,PTO SHAFT	T	1					
28	V210-360-602-00	BOLT/SP	T	2					
29	1738-255-310-10	LEVER/PTO/MID COMP	T	1					
30	3640-585-001-00	GLIP/YELLOW	T	1					

FIG. 62 MID PTO SET (EXCEPT M TYPE)(2/2) (OPTION)

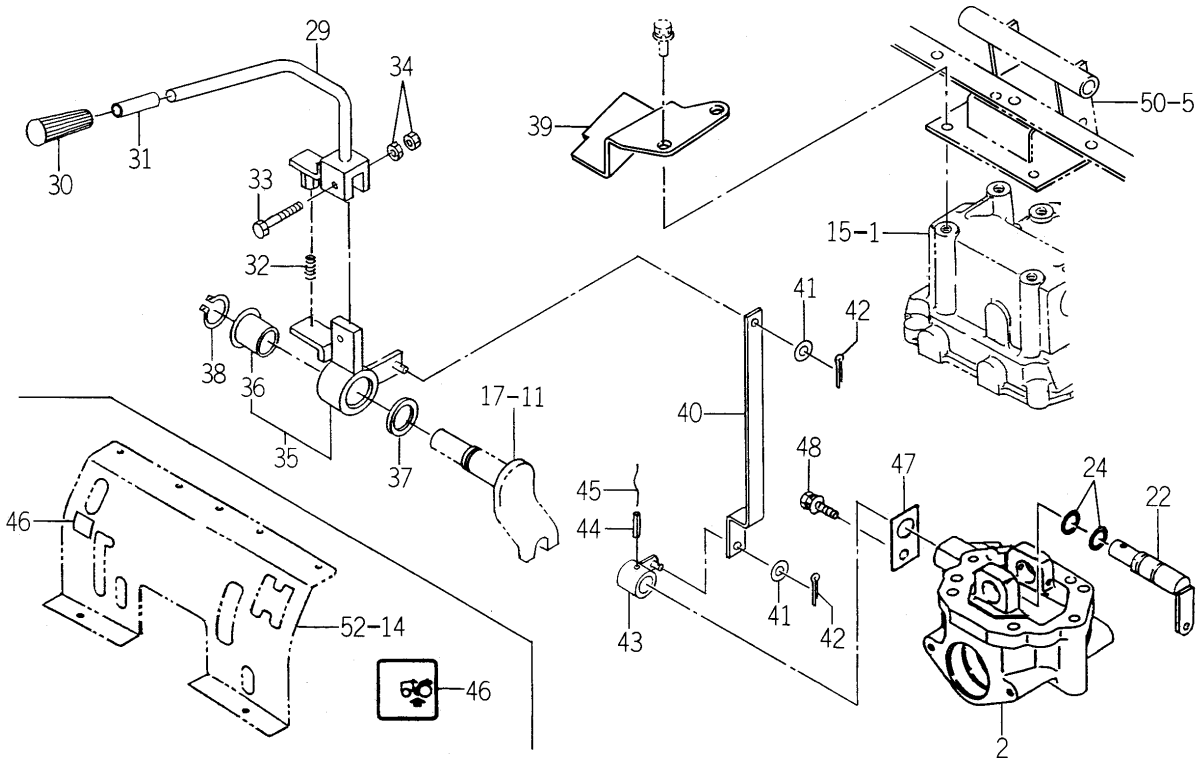

1738-255A-0100

KEY	PART CODE	DESCRIPTION	SPC	TYPE OF MODEL TM3160		ITC	COL	GRP	REMARKS
31	1682-255-303-00	TUBE/10X12X50	T	1					
32	2149-601-031-00	SPRING/HC024	T	1					
33	V200-360-604-00	BOLT	T	1					
34	V300-460-006-00	NUT/M 6	T	1					
35	1738-255-330-00	ARM/PTO/MID ASSY	T	1					
36	1581-521-642-00	BUSH/25X28X27	T	1					
37	3670-520-008-00	WASHER/25X34X02	T	1					
38	V704-140-025-00	RING,SNAP/25 C	T	1					
39	1738-255-002-00	GUIDE/PTO/MID	T	1					
40	1738-255-001-00	ROD/TIE/MID	T	1					
41	V411-260-008-00	WASHER,PL/M 8	T	2					
42	V500-162-001-50	PIN,SPLIT/2 X15	T	2					
43	1683-265-510-00	ARM/SHIFT/MID COMP	T	1					
44	V580-140-602-50	PIN,SPRING/6 X25 W	T	1					
45		WIRE	T	1					
46	1738-902-007-00	LABEL/PTO/MID	T	1					
47	1620-255-208-00	PLATE/I/30X50	T	1					
48	V211-360-801-60	BOLT,SEMS(SP)	T	1					

FIG. 63 REAR WHEEL (TURF) SYSTEM (OPTION)

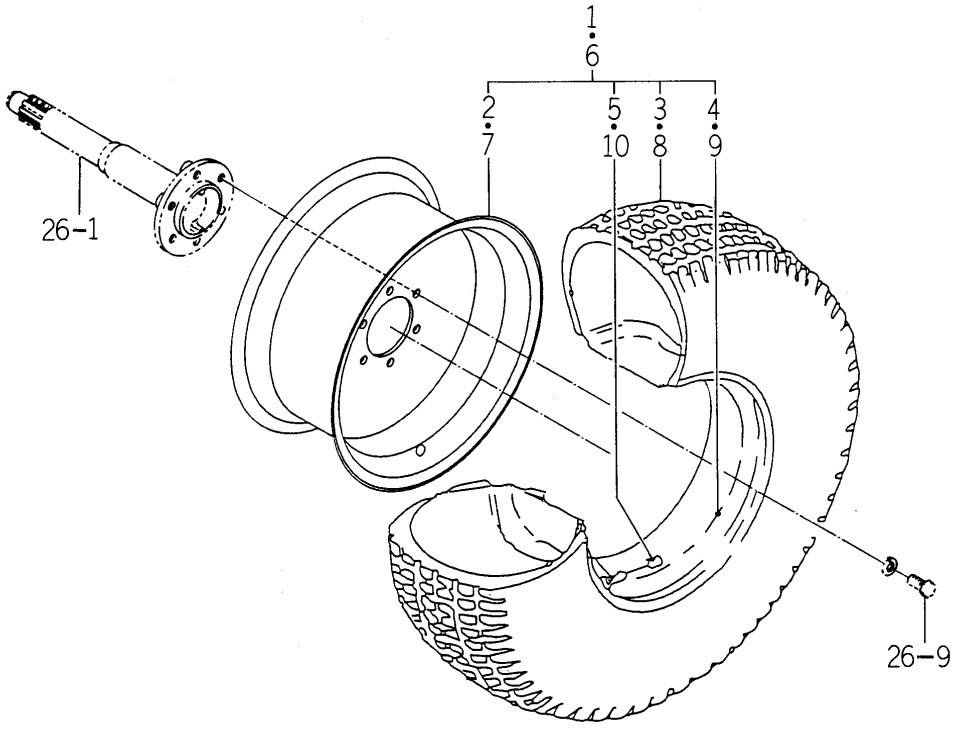

1714-317 -0100

KEY	PART CODE	DESCRIPTION	SPC	TYPE OF MODEL TM3160		ITC	COL	GRP	REMARKS
1	1714-317-200-00	TIRE/TURF/LH ASSY	T	1					
2	1714-317-210-10	WHEEL/15X7JA COMP	T	1					
3	1510-417-311-00	TIRE,F.TURF212-80-15	T	1					
4	1510-417-312-00	TUBE	T	1					
5	V999-200-003-00	CAP,TIRE VALVE	T	1					
6	1714-317-220-00	TIRE/TURF/RH ASSY	T	1					
7	1714-317-210-10	WHEEL/15X7JA COMP	T	1					
8	1510-417-311-00	TIRE,F.TURF212-80-15	T	1					
9	1510-417-312-00	TUBE	T	1					
10	V999-200-003-00	CAP,TIRE VALVE	T	1					

FIG. 64 REAR WHEEL SYSTEM (OPTION)

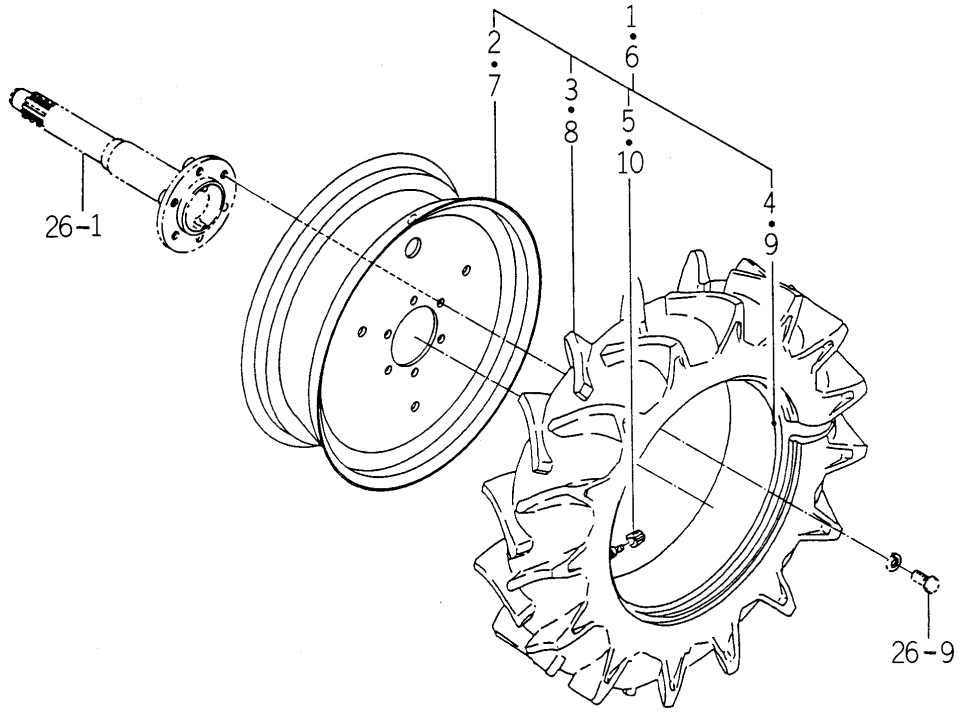

1738-317 -0100

KEY	PART CODE	DESCRIPTION	SPC	TYPE OF MODEL TM3160		ITC	COL	GRP	REMARKS
1	1738-317-210-00	TIRE/8-16-4/LH ASSY	T	1					
2	1434-317-201-10	WHEEL/16X5JA COMP	T	1					
3	1600-317-211-00	TIRE	T	1					
4	V889-000-081-60	TUBE/ 8-16	T	1					
5	V999-200-003-00	CAP,TIRE VALVE	T	1					
6	1738-317-220-00	TIRE/8-16-4/RH ASSY	T	1					
7	1434-317-201-10	WHEEL/16X5JA COMP	T	1					
8	1600-317-211-00	TIRE	T	1					
9	V889-000-081-60	TUBE/ 8-16	T	1					
10	V999-200-003-00	CAP,TIRE VALVE	T	1					

FIG. 65 HITCH (FRONT) SET (EXCEPT R TYPE) (OPTION)

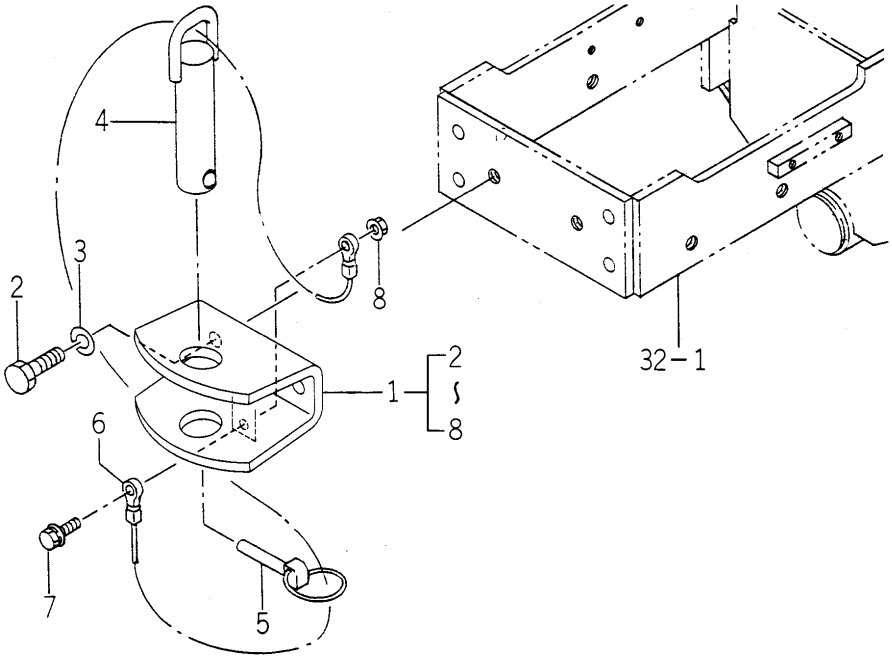

1738-411A-0100

KEY	PART CODE	DESCRIPTION	SPC	TYPE OF MODEL TM3160		ITC	COL	GRP	REMARKS
1	1738-411-300-10	HITCH/FRONT SET	T	1					
2	V201-361-203-00	BOLT/M12X30	T	2					
3	V401-160-012-00	WASHER,SP/M12	T	2					
4	1674-410-320-00	PIN/30X120 COMP	T	1					
5	1673-525-002-20	LINKPIN	T	1					
6	1674-410-301-00	CABLE	T	1					
7	V211-360-803-00	BOLT/SP	T	1					
8	V363-260-008-00	NUT/WASHER	T	1					

FIG. 66 FRONT WHEEL SYSTEM (OPTION)

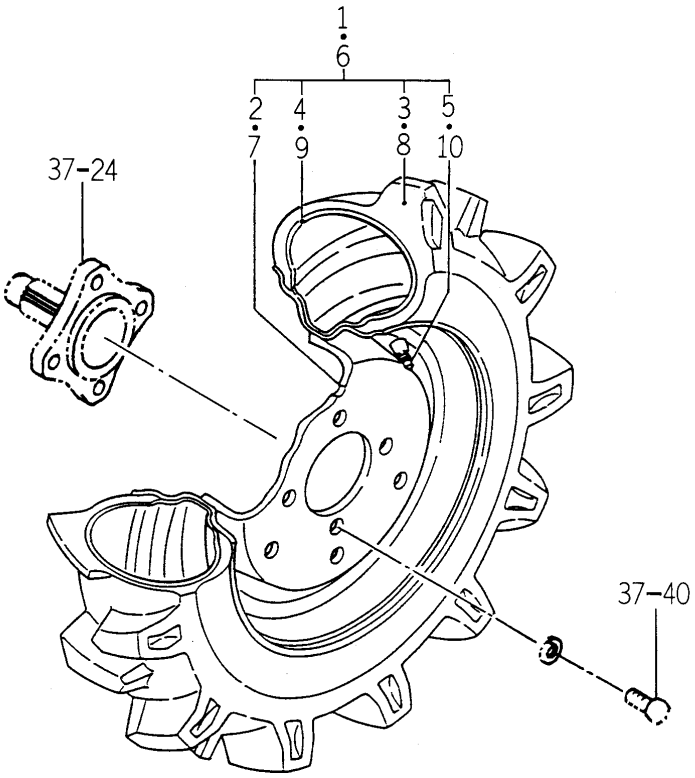

1613-437 -0100

KEY	PART CODE	DESCRIPTION	SPC	TYPE OF MODEL TM3160		ITC	COL	GRP	REMARKS
1	1493-441-200-00	TIRE/FRONT/LH ASSY	T	1					
2	1427-441-210-02	WHEEL/12X3.00D COMP	T	1					
3	1493-441-201-00	TIRE	T	1					
4	V881-005-001-20	TUBE/TIRE	T	1					
5	V999-200-003-00	CAP,TIRE VALVE	T	1					
6	1493-441-210-00	TIRE/FRONT/RH ASSY	T	1					
7	1427-441-210-02	WHEEL/12X3.00D COMP	T	1					
8	1493-441-201-00	TIRE	T	1					
9	V881-005-001-20	TUBE/TIRE	T	1					
10	V999-200-003-00	CAP,TIRE VALVE	T	1					

FIG. 67 FRONT WHEEL (TURF) SYSTEM (OPTION)

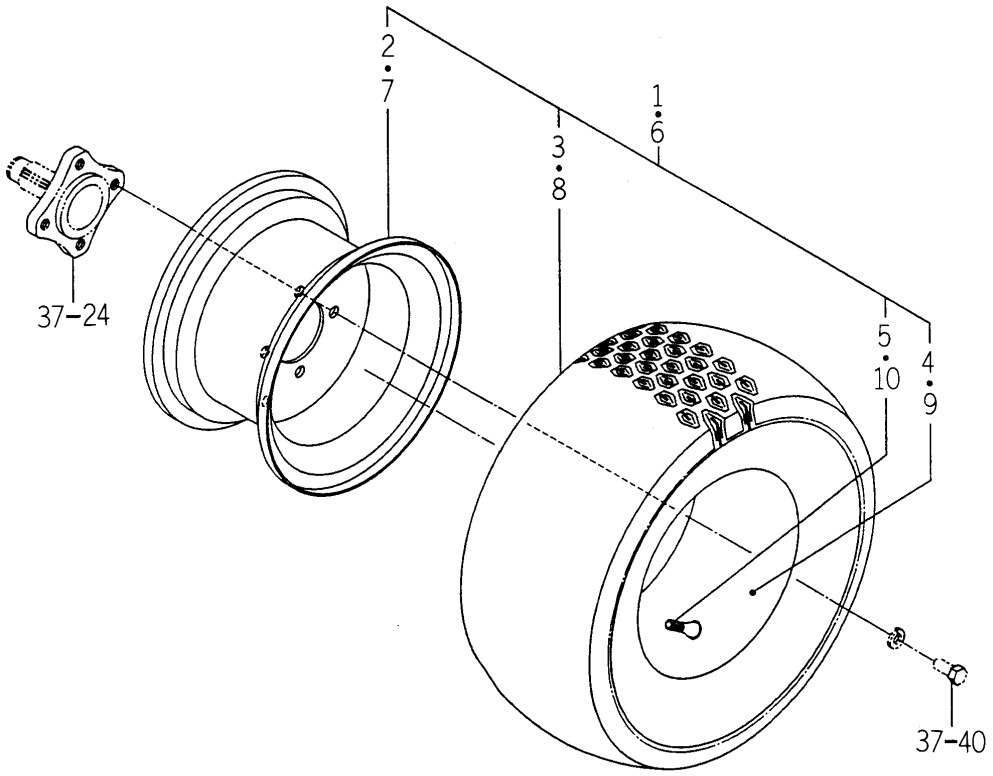

1714-441 -0100

KEY	PART CODE	DESCRIPTION	SPC	TYPE OF MODEL TM3160		ITC	COL	GRP	REMARKS
1	1714-441-200-00	TIRE/TURF/LH ASSY	T	1					
2	1434-441-240-01	RIM/WHEEL/600IX10	T	1					
3	1714-441-201-00	TIRE/TURF	T	1					
4	1714-441-202-00	TUBE	T	1					
5	V999-200-003-00	CAP,TIRE VALVE	T	1					
6	1714-441-220-00	TIRE/TURF/RH ASSY	T	1					
7	1434-441-240-01	RIM/WHEEL/600IX10	T	1					
8	1714-441-201-00	TIRE/TURF	T	1					
9	1714-441-202-00	TUBE	T	1					
10	V999-200-003-00	CAP,TIRE VALVE	T	1					

FIG. 68 HITCH (DRAW BAR) SET (EXCEPT R TYPE) (OPTION)

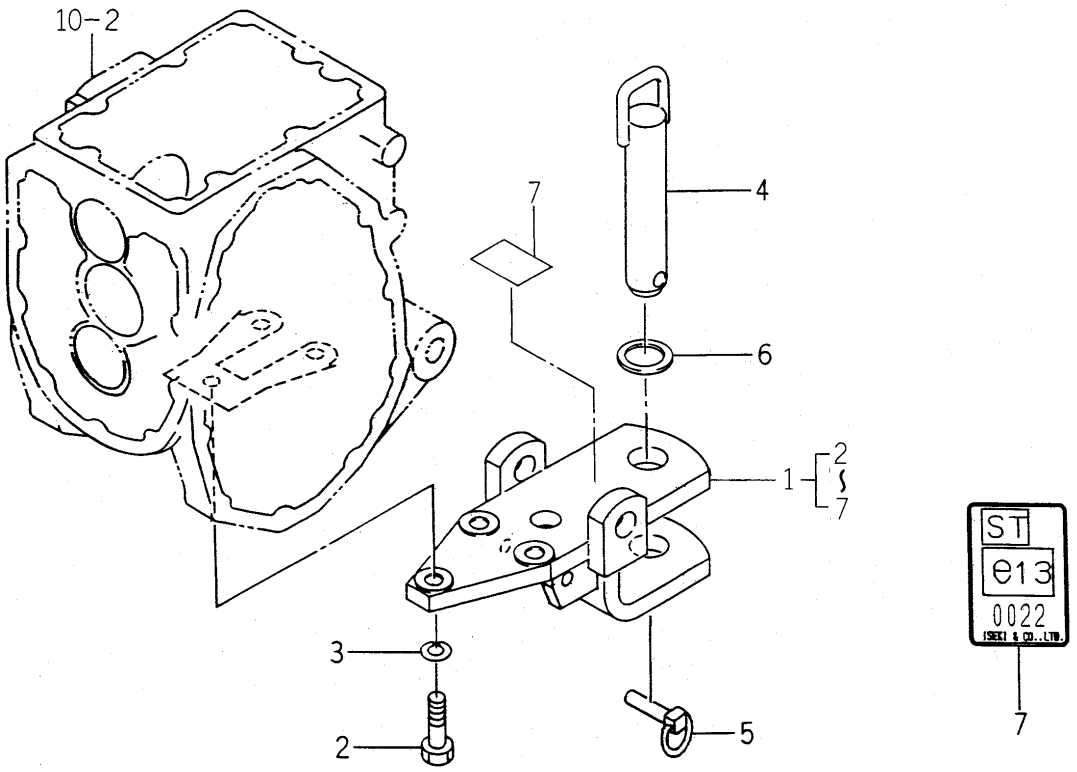

1738-520Z-0100

KEY	PART CODE	DESCRIPTION	SPC	TYPE OF MODEL TM3160		ITC	COL	GRP	REMARKS
1	1738-520-200-00	HITCHI/DRAWBARSET	T	1					
2	V201-361-204-00	BOLT/M12X40	T	3					
3	V401-160-012-00	WASHER,SP/M12	T	3					
4	1674-520-210-00	PIN/30X162 COMP	T	1					
5	1673-525-002-20	LINKPIN	T	1					
6	1674-520-004-00	INSULATOR	T	1					
7	1738-520-001-00	LABEL/DRAWBAR	T	1					

FIG. 69 ROPS SET (EXCEPT R TYPE) (OPTION)

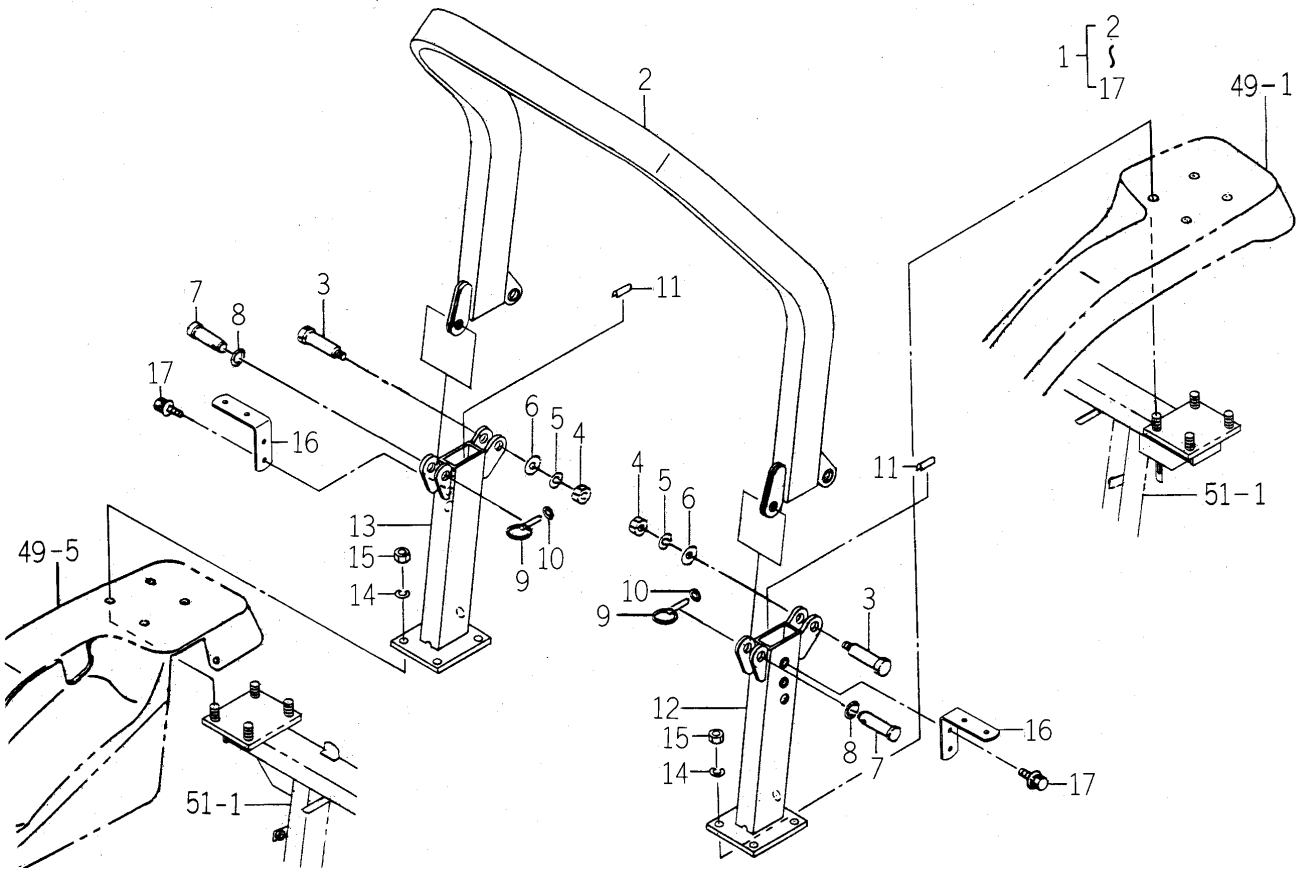

1738-702A-0100

KEY	PART CODE	DESCRIPTION	SPC	TYPE OF MODEL TM3160		ITC	COL	GRP	REMARKS
1	1738-702-400-00	FRAME/SF-182 SET	T	1					
2	1738-702-300-00	FRAME/UPPER COMP	T	1			7F		
3	1640-702-003-00	BOLT/SET/M16X60	T	2					
4	V304-260-016-00	NUT/M16	T	2					
5	V401-160-016-00	WASHER,SP/M16	T	2					
6	V411-260-016-00	WASHER / M16	T	2					
7	1640-702-004-00	PIN/20X58	T	2					
8	V720-112-401-80	O-RING/P18	T	2					
9	1673-525-002-20	LINKPIN	T	2					
10	V720-101-900-90	O-RING/P 9	T	2					
11	1560-314-001-00	INSULATOR	T	2					
12	1738-702-310-00	FRAME/LH COMP	T	1			7F		
13	1738-702-320-00	FRAME/RH COMP	T	1			7F		
14	V401-160-014-00	WASHER,SP/M14	T	8					
15	V304-460-014-00	NUT/M14	T	8					
16	1739-702-001-00	PLATE/L/38X114	T	2					
17	V211-360-802-00	BOLT/SP	T	4					

FIG. 70 WEIGHT (BUMPER) SYSTEM (OPTION)

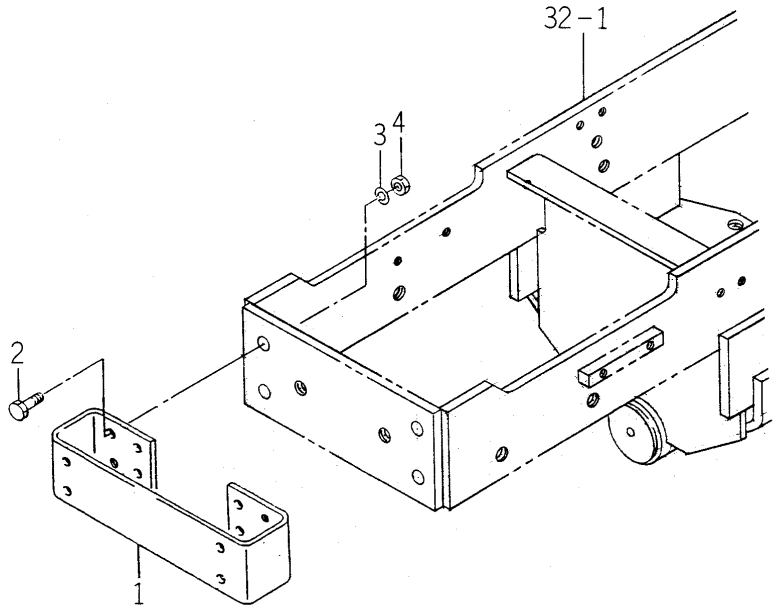

1672-922 -0100

KEY	PART CODE	DESCRIPTION	SPC	TYPE OF MODEL TM3160		ITC	COL	GRP	REMARKS
1	1620-410-001-10	PLATE/BUMPER	T	1					
2	V201-361-203-50	BOLT/M12X35	T	4					
3	V401-160-012-00	WASHER,SP/M12	T	4					
4	V304-260-012-00	NUT/M12	T	4					

FIG. 71 COMPONENT PARTS FOR K211-001-000-00 ON Fig.41

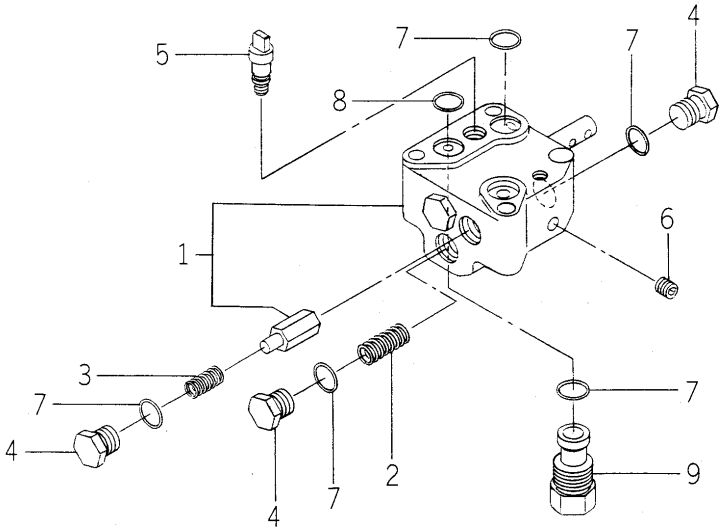

K211-001-000-0L

KEY	PART CODE	DESCRIPTION	SPC	TYPE OF MODEL TM3160		ITC	COL	GRP	REMARKS
1	K211-001-100-10	VALVE SET	*	1					
2	K211-001-006-20	SPRING	*	1					
3	K211-001-007-00	SPRING	*	1					
4	K211-001-008-00	PLUG	*	3					
5	K211-001-009-00	NEEDLE	*	1					
6	V780-140-000-1T	PLUG/SCREW/SEAL	*	4					
7	V720-112-401-20	O-RING/P12	*	7					
8	V720-111-900-60	O-RING P6 HS90	*	1					
9	K250-019-000-10	VALVE/RELIEF ASSY	*	1					

FIG. 72 COMPONENT PARTS FOR 1682-406-210-10 ON Fig.31

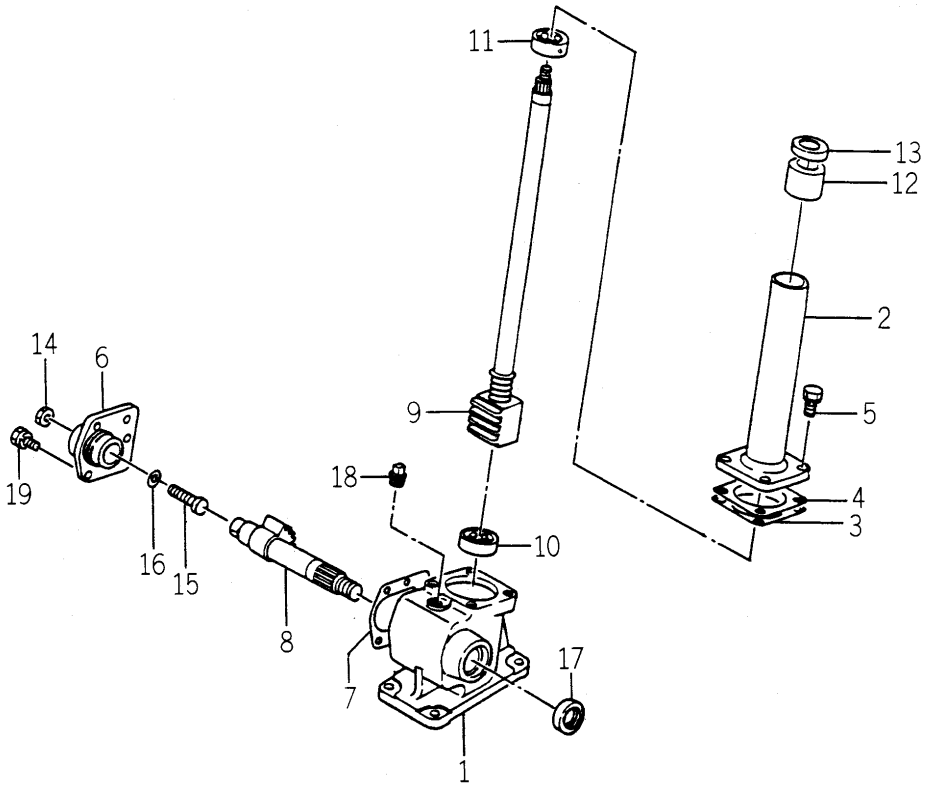

1682-406-210-1A

KEY	PART CODE	DESCRIPTION	SPC	TYPE OF MODEL TM3160		ITC	COL	GRP	REMARKS
1	1672-406-240-10	BOX ASSY	*	1					
2	1672-406-250-00	COVER/TOP ASSY	*	1					
3	1427-406-001-00	PACKING,TOP COVER	*	1					
4	1427-406-002-00	SHIM,TOP COVER	*	1					
5	1672-406-001-00	BOLT/S	*	2					
6	1427-406-004-00	COVER,SIDE	*	1					
7	1427-406-005-00	PACKING,SIDE COVER	*	1					
8	1427-406-006-00	SHAFT,CROSS	*	1					
9	1682-406-230-10	SCREW/BALL ASSY	*	1					
10	1427-406-007-00	BEARING,BALL	*	1					
11	1427-406-008-00	BEARING,BALL	*	1					
12	1672-406-003-00	BUSH/COLUMN	*	1					
13	1427-406-011-00	SEAL,OIL/MHSA19368	*	1					
14	V334-260-010-00	NUT/M10	*	1					
15	1672-406-002-00	BOLT/ADJUST	*	1					
16	1427-406-013-00	BOLT,ADJUST	*	1					
17	1427-406-014-00	SEAL,OIL/MHSA26388	*	1					
18	1427-406-017-00	PLUG,OIL/PT1/4	*	1					
19	1672-406-004-00	BOLT	*	5					

WIRING DIAGRAM (1)

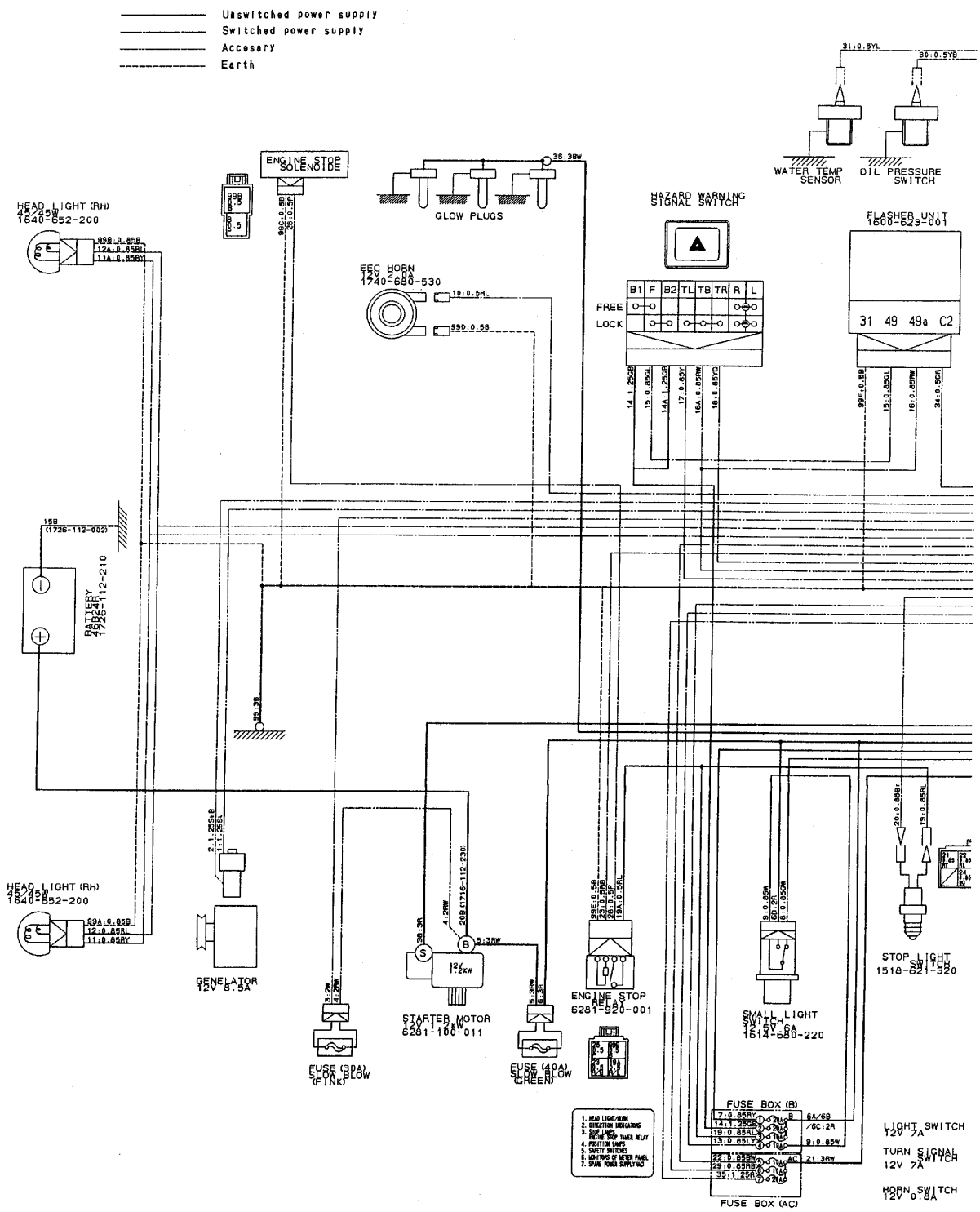

WIRING DIAGRAM (2)

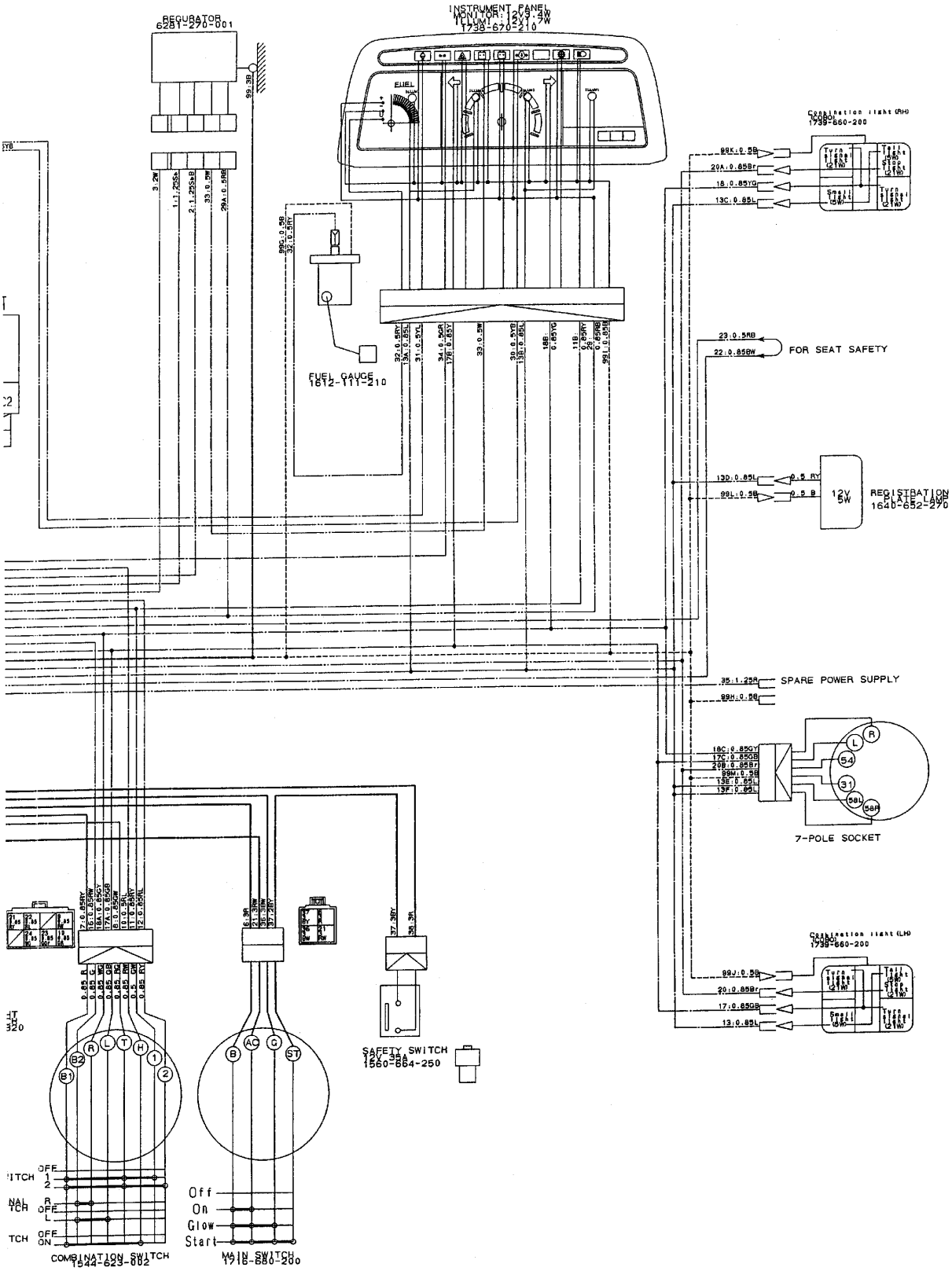

Numerical Index

6003-097-240-00

Part Code	Fig.	Key	Part Code	Fig.	Key	Part Code	Fig.	Key
1373-121-001-00	23	5	6209-630-002-10	24	6	6211-751-001-10	2	2
1425-621-004-00	9	16		25	22	6211-760-012-20	5	28
3625-540-004-00	9	40	6209-730-005-00	12	3	6211-777-007-30	10	1
3817-401-001-00	9	12		20	10	6212-111-015-10	13	1
	11	20	6209-730-006-00	15	4	6212-114-015-10	14	1
	17	14	6209-740-001-00	9	28	6212-116-015-10	14	3
	17	19	6209-749-001-20	5	15	6212-121-008-20	13	2
6209-000-002-00	11	18		9	48	6212-124-008-10	14	2
6209-000-003-00	1	7	6209-920-002-00	9	22	6212-126-008-10	14	4
6209-000-004-10	5	2		16	14	6212-211-001-10	13	3
6209-030-043-00	20	16		25	13	6212-230-003-10	13	5
6209-030-044-00	18	4	6209-940-004-00	11	14	6212-235-005-00	13	6
6209-030-085-00	23	9	6211-110-065-20	1	1	6212-271-006-00	13	7
6209-046-015-00	15	9	6211-141-008-30	1	6	6212-274-006-00	6	5
6209-046-044-00	10	2		25	3	6212-276-006-00	6	6
6209-046-057-00	23	6	6211-170-004-20	2	1	6212-310-008-40	15	1
6209-050-001-00	9	34	6211-173-003-00	2	3	6212-330-017-30	15	5
6209-050-002-00	9	35		25	4	6212-333-003-00	15	6
6209-056-001-00	20	7	6211-210-050-20	5	1	6212-370-011-00	15	10
6209-300-002-00	17	17	6211-258-001-00	5	8	6212-371-009-00	15	11
6209-300-013-00	5	29		25	8	6212-372-002-10	15	12
6209-300-014-00	1	8	6211-258-002-00	5	9	6212-379-001-00	15	15
6209-360-028-10	2	6		25	9	6212-511-002-00	12	1
6209-409-001-00	9	20	6211-291-016-00	5	24	6212-521-008-00	15	3
6209-409-003-00	11	17	6211-292-001-20	5	25	6212-522-010-00	12	2
6209-490-002-10	2	4		25	11	6212-523-023-00	12	6
6209-500-003-00	9	18	6211-310-017-30	9	1	6212-524-002-20	20	9
	9	27	6211-311-011-20	9	43	6212-530-005-20	9	50
	25	23	6211-312-002-30	9	44	6212-531-005-10	5	6
6209-572-003-00	2	5	6211-312-003-20	9	29	6212-535-001-00	12	4
	25	5		25	14	6212-535-002-00	20	13
6209-580-002-10	20	26	6211-312-004-20	25	15	6212-551-001-10	11	1
6209-587-001-00	13	4	6211-319-003-00	9	46	6212-552-001-20	11	2
6209-600-004-00	9	26	6211-322-002-00	9	55	6212-561-001-10	11	3
6209-600-006-00	7	2	6211-341-053-20	8	1	6212-563-001-00	11	4
6209-605-004-10	1	3	6211-342-002-10	8	2	6212-565-001-00	11	5
6209-605-005-10	5	30	6211-361-069-00	7	1	6212-569-002-00	1	4
6209-610-001-10	5	3	6211-510-001-00	5	10		25	2
6209-610-002-10	9	4	6211-511-003-00	5	11	6212-571-006-00	11	6
6209-610-008-00	5	7	6211-511-004-00	5	12	6212-575-001-00	11	7
6209-610-009-00	5	4	6211-540-001-00	6	1	6212-600-002-10	11	8
6209-625-002-00	9	9	6211-560-001-00	6	3	6212-611-004-10	11	9
	25	12	6211-599-001-10	5	13	6212-616-002-00	11	16
6209-625-012-00	5	14		6	2	6212-620-001-20	11	10
	25	10		6	4	6212-626-002-10	11	11

Numerical Index

Part Code	Fig.	Key	Part Code	Fig.	Key	Part Code	Fig.	Key
6212-628-004-00	11	12	6213-721-007-00	5	23	6215-546-003-10	9	19
6212-628-005-00	11	13	6213-729-013-10	17	20	6215-548-012-00	22	1
6213-100-003-30	16	1	6213-743-002-10	17	23	6215-549-001-10	5	27
6213-111-001-30	16	2		25	20	6215-549-003-00	20	22
6213-119-001-00	16	6	6214-111-011-20	3	1	6215-549-007-10	20	27
6213-120-003-20	16	3	6214-115-001-20	3	2	6215-549-008-10	20	31
6213-125-001-00	16	4		25	6	6215-600-109-30	20	1
6213-129-003-00	16	5	6214-141-010-10	4	1	6215-611-002-00	27	1
6213-129-005-00	5	18	6214-145-001-30	4	2	6215-612-016-00	27	49
	9	8		25	7	6215-619-012-00	27	50
6213-129-006-00	5	16	6215-300-037-00	19	1	6215-619-014-00	27	53
	8	3	6215-311-005-00	26	16		27	57
	15	7	6215-315-002-00	19	2	6215-619-015-00	27	54
6213-140-023-00	16	8	6215-330-022-00	26	1	6215-619-016-00	27	55
6213-149-002-00	16	10	6215-332-006-00	26	15	6215-619-026-00	27	56
6213-160-002-20	9	30	6215-339-004-00	26	14	6215-619-030-00	27	52
6213-161-001-20	9	31	6215-342-002-00	26	13	6215-621-001-40	20	8
6213-164-001-00	9	32	6215-343-002-00	26	12	6215-622-002-00	27	12
6213-211-001-10	9	41	6215-345-044-00	26	2	6215-629-017-00	27	13
6213-240-002-10	16	15	6215-345-045-00	26	3	6215-629-018-00	27	14
6213-311-003-10	16	12	6215-345-046-00	26	4	6215-629-020-00	27	18
6213-319-004-00	9	2	6215-345-047-00	26	5	6215-629-021-00	27	19
6213-610-005-40	17	1	6215-345-048-00	26	6	6215-629-022-00	27	20
6213-611-003-20	17	2	6215-345-049-00	26	7	6215-629-023-00	27	21
6213-612-004-00	17	9	6215-345-050-00	26	8	6215-629-024-00	27	22
6213-613-002-10	17	8	6215-345-051-00	26	9	6215-629-025-00	27	23
6213-614-003-10	17	12	6215-345-052-00	26	10	6215-629-026-00	27	24
	25	18	6215-345-053-00	26	11	6215-629-027-00	27	25
6213-614-006-10	17	16	6215-359-003-00	26	17	6215-629-028-00	27	26
	25	19	6215-359-004-00	26	18	6215-629-029-00	27	27
6213-619-002-00	17	11	6215-411-074-10	21	2	6215-629-030-00	27	28
6213-619-003-00	17	10	6215-411-106-00	19	3	6215-629-031-00	27	29
6213-619-005-00	17	15	6215-411-107-00	19	4	6215-629-032-00	27	30
6213-621-003-00	17	6	6215-411-108-00	19	5	6215-629-033-00	27	31
6213-622-002-10	17	5	6215-412-006-00	21	1	6215-629-034-00	27	32
6213-631-002-00	17	3	6215-520-001-00	20	15	6215-629-068-00	27	33
6213-631-005-00	17	4	6215-526-004-00	20	17	6215-629-069-00	27	34
6213-641-002-10	18	2	6215-531-021-00	20	23	6215-629-070-00	27	35
6213-642-002-00	17	7	6215-541-001-10	20	18	6215-629-071-00	27	36
6213-660-007-00	18	1	6215-541-016-30	22	2	6215-629-072-00	27	37
6213-669-008-00	18	3	6215-541-024-30	20	24	6215-629-073-00	27	38
6213-671-003-00	18	5	6215-542-004-20	9	23	6215-629-074-00	27	39
6213-674-004-20	23	3	6215-542-005-10	9	25	6215-629-075-00	27	40
6213-711-003-20	17	27	6215-542-006-00	20	20	6215-629-076-00	27	41
6213-716-001-50	17	22	6215-543-001-10	20	19	6215-629-077-00	27	42

Numerical Index

6003-097-240-00

Part Code	Fig.Key		Part Code	Fig.Key		Part Code	Fig.Key	
6215-629-078-00	27	43	6281-129-067-00	28	14	6901-911-020-00	8	4
6215-629-079-00	27	44	6281-129-068-00	28	15	6902-050-610-00	15	13
6215-629-080-00	27	45	6281-129-069-00	28	16	6902-050-816-00	9	45
6215-629-081-00	27	46	6281-129-070-00	28	17	6904-110-818-00	5	19
6215-629-082-00	27	47	6281-129-071-00	28	18	6904-110-822-00	9	5
6215-631-017-00	27	2	6281-129-072-00	28	21		9	49
6215-634-002-00	27	15	6281-129-073-00	28	22	6904-110-840-00	5	20
6215-635-002-00	27	8	6281-129-074-00	28	23	6904-110-850-00	9	7
6215-635-008-00	27	51	6281-129-075-00	28	24	6904-110-855-00	9	6
6215-637-008-00	27	48	6281-129-076-00	28	25	6909-110-406-00	9	36
6215-639-006-00	27	16	6281-129-077-00	28	26		20	28
6215-639-007-00	27	17	6281-129-078-00	28	27	6909-110-408-00	9	52
6215-641-007-00	27	3	6281-129-079-00	28	34		9	56
6215-643-002-00	27	4	6281-129-080-00	28	8		28	32
6215-644-002-00	27	6	6281-151-014-00	28	20	6909-110-410-00	23	7
6215-649-003-00	27	5	6281-200-007-00	23	1	6909-150-506-00	15	14
6215-649-004-10	27	7	6281-211-004-00	29	2	6909-150-508-00	28	31
6215-649-005-00	27	9	6281-213-016-10	29	1	6909-902-299-00	5	22
6215-649-006-10	27	10	6281-214-006-00	29	13	6909-906-105-10	16	13
6215-649-007-00	27	11	6281-222-010-10	29	3	6911-129-006-00	1	2
6219-310-003-20	9	37	6281-229-021-00	29	5	J061-210-015-00	17	21
6219-732-016-00	24	4	6281-229-022-00	29	6	P117-303-003-00	9	24
6219-752-001-00	20	2	6281-229-023-00	29	7	V211-560-802-50	4	3
6219-752-002-00	20	3	6281-229-024-00	29	8	V230-360-601-00	7	4
6219-752-003-00	20	4	6281-229-025-10	29	9	V230-360-601-20	5	26
6219-752-004-00	20	5	6281-229-026-00	29	10		24	7
6219-752-005-00	20	6	6281-229-027-00	29	11	V230-360-601-60	9	39
6281-100-014-00	23	8	6281-229-028-00	29	12	V231-360-801-60	9	13
6281-111-009-00	28	1	6281-229-031-00	29	4		16	11
6281-115-017-00	28	10	6281-270-001-10	23	2	V231-360-802-00	3	3
6281-115-018-00	28	11	6281-410-010-00	24	3		17	18
6281-117-003-00	28	4	6281-910-001-00	24	5		17	24
6281-118-007-00	28	3	6281-920-001-00	24	8		23	4
6281-119-009-00	28	2	6281-971-003-00	24	1	V231-360-802-50	17	29
6281-121-010-00	28	5	6282-450-002-00	24	2	V231-360-803-00	9	17
6281-124-011-00	28	6	6287-810-026-10	25	1	V231-360-804-00	3	4
6281-127-003-00	28	19	6294-453-002-00	5	21	V231-360-804-50	9	14
6281-129-029-00	28	29	6509-605-019-10	5	5		17	13
6281-129-030-00	28	28		9	3	V231-360-805-00	11	19
6281-129-043-00	28	30	6511-321-083-00	9	54	V231-360-805-50	9	11
6281-129-058-00	28	9	6513-770-022-10	17	26	V231-360-807-50	9	15
6281-129-062-00	28	33	6901-066-645-00	15	16		17	25
6281-129-064-00	28	7	6901-910-612-00	12	5	V231-360-808-50	9	10
6281-129-065-00	28	12		20	14	V341-120-008-00	9	21
6281-129-066-00	28	13	6901-910-625-00	16	7	V401-160-006-00	20	30

Numerical Index

Part Code	Fig.Key		Part Code	Fig.Key	Part Code	Fig.Key
V401-160-008-00	9	53				
	9	57				
V411-260-006-00	20	29				
V523-100-802-40	5	17				
V523-101-001-80	15	2				
V600-110-600-40	20	12				
V600-110-600-50	9	51				
V600-110-620-30	20	11				
V600-150-600-20	15	8				
V682-200-000-60	1	5				
V704-140-016-00	11	15				
V705-140-012-00	9	33				
V710-140-004-00	20	21				
V720-101-900-80	20	25				
V720-102-401-50	16	9				
	25	17				
V720-102-401-80	7	3				
V723-102-002-40	9	38				
V723-102-003-60	9	42				
V723-102-005-00	9	47				
	25	16				
V723-102-005-50	17	28				
	25	21				

Numerical Index

1738-097-100-00

Part Code	Fig.	Key	Part Code	Fig.	Key	Part Code	Fig.	Key
1105-106-001-00	9	5	1425-621-004-00	56	22	1427-406-014-00	72	17
1118-901-002-00	58	3	1427-111-229-00	3	15	1427-406-017-00	72	18
1302-225-003-00	17	3	1427-201-005-00	10	24	1427-406-018-00	31	23
	21	2	1427-201-007-00	10	22		38	3
	23	22		25	12	1427-432-016-00	35	6
	62	14	1427-201-008-00	10	23	1427-441-210-02	66	2
1305-241-001-00	50	10	1427-201-012-00	24	14		66	7
1305-931-003-00	44	26	1427-201-013-00	24	15	1427-501-003-00	39	3
1342-402-006-00	56	18	1427-201-014-10	24	16	1427-502-003-00	40	7
	56	30	1427-201-015-10	24	17	1427-511-001-00	44	13
1376-402-003-00	6	10	1427-203-002-00	12	4	1427-511-002-00	44	12
	6	15	1427-204-003-10	13	3	1427-511-003-00	44	20
	56	11	1427-209-200-00	17	11	1427-511-004-00	44	21
	56	16	1427-210-003-00	18	2	1427-511-005-00	44	27
	56	19		18	10	1427-511-220-00	44	10
	56	24	1427-210-008-10	17	1	1427-511-250-10	44	30
	56	26	1427-210-009-00	17	2	1427-511-270-00	44	17
	56	29	1427-210-011-00	17	6	1427-511-273-00	44	19
	56	31	1427-210-200-00	17	8	1427-511-280-00	44	23
1402-511-600-00	44	33	1427-212-002-00	20	6	1427-511-290-00	44	18
1404-117-008-00	7	9	1427-212-003-20	20	2	1427-511-300-00	44	24
1404-312-006-00	29	13		23	15	1427-511-320-00	44	9
	29	17		62	19	1427-601-003-00	17	15
1404-402-005-00	31	21	1427-301-002-20	24	1		21	8
	31	22	1427-301-005-00	24	4	1427-611-001-00	50	4
	38	2	1427-301-007-00	24	6	1432-616-002-00	29	51
1404-503-006-00	43	19	1427-301-009-00	24	7		46	12
1414-312-002-00	7	1	1427-301-013-20	24	22		50	12
	42	10	1427-301-014-10	24	23	1432-665-014-00	49	19
1415-102-007-00	4	3	1427-301-015-10	24	24	1434-120-005-00	8	16
1415-102-008-00	4	5	1427-301-016-00	24	25	1434-122-005-00	9	15
1415-102-013-00	4	11	1427-301-018-00	24	27	1434-122-007-00	9	9
1415-312-500-00	29	12	1427-301-019-00	24	29	1434-122-230-10	8	11
1416-501-011-00	41	3	1427-301-021-00	27	6	1434-203-002-00	12	11
1416-621-037-00	5	6	1427-307-002-10	26	2	1434-211-004-00	19	5
1421-122-003-00	9	10	1427-307-003-00	26	3	1434-317-201-10	64	2
1421-507-002-10	41	1	1427-406-001-00	72	3		64	7
1421-507-014-00	47	20	1427-406-002-00	72	4	1434-441-240-01	67	2
	52	19	1427-406-004-00	72	6		67	7
1421-603-004-00	6	3	1427-406-005-00	72	7	1434-501-003-10	39	17
	46	42	1427-406-006-00	72	8	1434-501-005-00	39	23
1423-520-001-10	44	25	1427-406-007-00	72	10	1434-501-006-00	41	10
1424-101-203-00	1	18	1427-406-008-00	72	11	1434-503-001-00	41	12
1424-101-204-00	1	19	1427-406-011-00	72	13	1434-503-002-00	41	15
1425-621-004-00	1	11	1427-406-013-00	72	16	1434-503-250-10	41	19

Numerical Index

Part Code	Fig.	Key	Part Code	Fig.	Key	Part Code	Fig.	Key
1434-503-260-20	41	22	1518-432-250-00	36	2	1568-525-300-10	44	32
1434-511-200-20	44	37	1518-621-320-00	55	20	1572-102-003-00	4	10
1434-511-210-00	44	34	1527-604-002-00	48	19	1575-261-203-00	34	7
1435-120-002-30	8	23		49	17	1579-501-200-00	39	1
1435-122-002-00	8	12		52	9	1581-521-642-00	23	37
1435-511-250-10	44	1	1544-104-205-00	3	4		62	36
1435-511-270-00	44	8	1544-215-015-00	15	9	1588-117-001-00	46	10
1440-103-201-00	4	6	1544-215-016-00	15	15	1588-651-205-00	55	15
1442-313-202-00	29	24	1544-304-006-10	24	10	1593-402-051-10	31	17
1444-102-202-00	4	2	1544-503-001-20	41	4	1594-105-001-00	2	2
1444-102-204-00	4	7	1544-503-200-20	41	5	1594-218-001-00	12	2
1444-122-002-00	29	31	1544-623-001-00	55	9		20	3
1444-314-009-10	10	33	1544-623-232-00	55	10	1600-117-002-00	7	8
	23	28	1544-623-233-00	55	11	1600-202-005-00	11	4
	62	27	1544-623-234-00	55	12	1600-203-006-00	12	8
1444-328-272-00	29	26	1544-623-235-00	55	13	1600-317-211-00	64	3
1444-328-273-00	29	25	1550-514-290-00	44	31		64	8
1444-411-006-00	24	2	1560-104-006-60	1	15	1600-502-003-00	15	5
1444-601-015-00	46	34	1560-104-010-40	1	17		16	4
	47	6	1560-111-003-20	46	28		40	8
	47	12	1560-132-007-30	29	21	1600-616-006-00	5	11
1480-212-003-00	23	9		29	33	1600-623-002-00	55	16
	62	9	1560-314-001-00	27	2	1600-624-004-00	56	17
1480-501-003-00	39	2		57	10	1600-624-201-00	55	27
1488-413-023-10	37	12		69	11	1600-902-002-10	59	3
1488-541-021-00	15	21	1560-401-004-40	48	4	1600-904-051-00	59	7
1491-120-001-00	8	17	1560-515-004-50	43	20	1612-102-005-00	1	5
1491-203-006-10	12	3	1560-525-001-40	44	2	1612-105-002-00	4	19
1491-204-002-10	13	5	1560-630-024-00	29	52	1612-111-210-00	5	5
1491-211-003-00	19	7	1560-658-202-00	54	17	1612-117-200-20	7	6
1491-307-201-00	26	4	1560-658-282-40	54	13	1612-406-001-00	31	18
1491-434-017-00	37	26		54	15	1612-434-006-00	37	21
1493-441-200-00	66	1	1560-664-250-00	55	22	1612-434-009-00	37	30
1493-441-201-00	66	3	1560-664-252-00	55	23	1612-505-220-00	42	11
	66	8	1560-664-253-00	55	24	1612-603-002-00	48	9
1493-441-210-00	66	6	1560-666-004-00	6	16	1612-690-001-00	5	10
1507-216-004-10	12	5		6	17	1614-102-213-00	1	3
	35	3		56	15	1614-102-214-00	1	4
1509-105-210-00	4	1		56	21	1614-111-002-10	46	26
1510-328-260-00	29	16		56	25	1614-215-006-00	15	14
1510-417-311-00	63	3	1564-201-003-00	37	2	1614-432-006-00	35	11
	63	8		37	18	1614-433-212-00	36	6
1510-417-312-00	63	4	1564-434-222-10	32	2	1614-501-006-00	15	19
	63	9	1564-667-002-00	15	20	1614-501-015-10	50	3
1518-306-203-00	36	3	1566-525-101-00	44	36	1614-505-002-00	42	5

Numerical Index

1738-097-100-00

Part Code	Fig.Key		Part Code	Fig.Key		Part Code	Fig.Key	
1614-505-003-00	42	6	1672-207-230-00	15	13	1674-410-301-00	65	6
1614-505-004-00	42	7	1672-207-240-00	15	8	1674-410-320-00	33	4
1614-505-007-00	42	15	1672-208-200-20	16	1		65	4
1614-603-008-00	48	18	1672-210-001-00	18	1	1674-520-004-00	45	6
1614-603-202-00	48	17	1672-210-002-00	18	6		68	6
1614-608-220-10	52	18	1672-210-003-10	18	9	1674-520-210-00	45	4
1614-630-002-00	47	9	1672-210-004-00	18	15		68	4
1614-670-001-10	54	21	1672-210-005-00	18	16	1674-619-300-10	52	26
1614-670-201-00	54	8	1672-211-009-10	19	10	1674-619-310-00	52	24
1614-670-240-00	54	7	1672-212-002-10	20	4	1674-652-200-00	53	1
1614-670-250-00	54	9	1672-216-310-00	21	6	1674-652-202-00	53	2
1614-670-281-00	54	14	1672-301-002-00	24	8	1674-654-004-00	49	13
1614-680-220-00	55	14	1672-301-003-00	24	3	1674-654-211-00	53	4
1617-102-005-00	1	14	1672-301-004-00	24	5		53	6
1620-255-208-00	23	26	1672-307-001-10	26	1	1674-654-212-00	53	5
	62	47	1672-406-001-00	72	5	1674-654-270-00	53	9
1620-410-001-10	70	1	1672-406-002-00	72	15	1674-654-271-00	53	10
1627-122-008-00	29	48	1672-406-003-00	72	12	1674-654-272-00	53	11
1636-271-013-00	15	7	1672-406-004-00	72	19	1674-654-400-00	49	11
1636-901-022-00	60	3	1672-406-005-00	31	5	1674-904-001-00	60	1
1640-658-322-00	54	3	1672-406-201-00	31	2	1674-904-002-10	60	6
1640-658-324-00	54	5	1672-406-230-00	31	16	1674-904-003-00	60	7
1640-658-325-00	54	6	1672-406-240-10	72	1	1674-904-004-00	60	8
1640-702-003-00	57	2	1672-406-250-00	72	2	1674-904-005-00	60	13
	69	3	1672-434-007-00	37	22	1674-904-008-00	60	4
1640-702-004-00	57	6	1672-434-008-00	37	25	1675-102-002-00	1	22
	69	7	1672-434-009-00	37	1	1675-102-004-00	1	7
1646-116-051-00	7	7	1672-434-011-10	37	17	1675-102-006-00	1	10
1650-104-201-00	3	5	1672-502-003-00	40	1	1675-104-002-00	3	9
1650-259-010-00	18	7	1672-502-004-00	40	4	1675-104-210-10	3	1
	18	17	1672-503-210-00	41	18	1675-104-211-00	3	2
1650-432-001-00	35	4	1672-601-001-00	48	14	1675-104-213-00	3	3
1650-601-007-00	46	5	1673-314-001-00	29	4	1675-112-002-00	6	5
1650-650-222-00	56	3		29	6	1675-116-001-00	7	5
1650-654-036-00	55	29	1673-525-002-20	33	5	1675-117-210-20	7	13
1672-103-001-00	2	5		44	3	1675-135-001-00	9	6
1672-105-211-00	4	9		44	35	1675-312-051-00	29	8
1672-111-002-00	5	3		45	5	1675-508-003-00	43	27
1672-111-230-00	5	13		57	8	1675-508-004-00	43	5
1672-120-006-00	8	13		65	5	1675-601-002-00	46	4
1672-120-007-00	8	15		68	5	1675-601-003-00	47	4
1672-122-001-20	9	12		69	9	1675-670-220-00	54	10
1672-202-002-20	11	7	1673-658-214-00	54	4	1675-670-230-00	54	19
1672-207-001-10	15	1	1673-730-008-00	29	34	1681-434-002-10	37	24
1672-207-002-10	15	17	1674-410-301-00	33	6	1682-111-300-00	5	4

Numerical Index

Part Code	Fig.	Key	Part Code	Fig.	Key	Part Code	Fig.	Key
1682-112-006-10	6	6	1682-902-005-00	59	1	1714-441-202-00	67	9
1682-120-001-00	8	22	1682-902-008-00	58	6	1714-441-220-00	67	6
1682-201-001-10	10	1	1682-902-009-00	59	4	1716-102-003-00	1	23
1682-202-001-00	11	1	1682-902-013-00	59	8	1716-104-001-00	3	7
1682-202-002-00	11	10	1682-902-014-00	59	6	1716-105-001-00	4	15
1682-202-003-00	11	11	1682-924-220-10	45	1	1716-112-230-00	6	9
1682-202-004-00	11	12	1683-102-220-00	1	21	1716-116-200-00	7	2
1682-203-001-00	12	7	1683-265-510-00	23	44	1716-120-200-00	8	19
1682-203-002-00	12	9		62	43	1716-601-003-00	47	19
1682-203-003-10	12	6	1683-603-004-00	48	1	1716-601-017-00	46	36
1682-203-004-00	12	10	1683-902-004-00	59	5	1716-602-002-10	47	2
1682-204-001-00	13	1	1684-203-200-40	12	1	1716-603-005-00	48	3
1682-205-001-00	14	1	1684-211-003-10	19	12	1716-680-006-00	55	7
1682-209-200-20	17	12	1688-201-055-10	10	2	1716-680-200-10	55	4
1682-211-002-20	19	14	1688-201-056-00	10	30	1716-690-502-00	56	2
1682-211-004-20	19	1	1688-312-001-10	29	10	1717-120-230-10	8	20
1682-211-007-00	19	13	1690-608-003-00	52	20	1717-304-001-00	24	19
1682-211-008-00	19	4	1703-104-003-00	3	6	1717-304-002-00	24	20
1682-211-210-00	19	6	1703-261-002-00	16	8	1717-306-001-30	25	1
1682-216-002-10	21	5	1703-310-202-00	28	2	1717-306-002-30	25	2
1682-216-006-00	21	1		28	6	1717-309-200-10	27	1
1682-216-007-10	21	15	1703-313-001-10	46	38	1717-310-001-00	28	11
1682-216-260-10	21	12	1703-432-001-00	35	8	1717-310-002-10	28	1
1682-216-270-10	21	9	1703-432-009-00	35	9	1717-310-003-10	28	5
1682-255-001-00	23	47	1703-432-011-00	35	10	1717-310-004-00	28	3
1682-255-002-20	23	8	1703-434-003-00	37	7		28	7
	62	8	1703-434-004-00	37	10	1717-310-200-00	28	9
1682-255-201-10	23	1	1703-435-001-00	37	42	1717-436-200-00	38	1
	62	2	1703-435-002-00	37	43	1717-501-002-00	39	11
1682-255-202-00	23	7	1704-705-003-00	52	10	1717-503-200-10	41	11
	62	7	1705-102-014-00	1	27	1717-603-002-00	48	13
1682-255-203-00	23	6	1705-902-006-00	60	2	1717-630-001-30	52	7
	62	6	1705-902-007-00	60	10	1717-630-002-10	52	8
1682-255-204-00	23	11	1705-904-001-00	60	12	1717-630-004-00	52	6
	62	11	1705-904-002-00	60	11	1725-120-211-00	34	2
1682-255-205-10	23	13	1709-603-001-00	48	10	1725-120-212-00	34	3
	62	12	1710-690-502-00	56	7	1725-120-213-00	34	4
1682-255-210-40	23	20	1714-317-200-00	63	1	1725-120-214-00	34	5
	62	22	1714-317-210-10	63	2	1725-120-216-00	34	6
1682-255-303-00	23	32		63	7	1725-266-001-00	16	9
	62	31	1714-317-220-00	63	6		42	16
1682-406-210-10	31	1	1714-441-200-00	67	1	1726-102-001-00	1	28
1682-406-230-10	72	9	1714-441-201-00	67	3	1726-102-200-10	1	25
1682-690-370-10	55	25		67	8	1726-102-210-00	1	1
1682-690-380-00	55	28	1714-441-202-00	67	4	1726-102-211-00	1	2

Numerical Index

1738-097-100-00

Part Code	Fig.	Key	Part Code	Fig.	Key	Part Code	Fig.	Key
1726-103-200-00	2	1	1738-255-330-00	23	36	1738-514-210-00	44	5
1726-104-200-00	3	11		62	35	1738-520-001-00	45	7
1726-105-001-10	4	17	1738-309-001-10	27	3		68	7
1726-111-001-00	5	12	1738-312-005-00	29	43	1738-520-200-00	68	1
1726-111-200-20	5	8	1738-312-006-00	29	44	1738-601-001-00	46	33
1726-111-220-00	5	1	1738-312-007-00	29	45	1738-601-002-10	46	43
1726-112-002-10	6	11	1738-312-009-00	29	58	1738-601-003-10	46	45
1726-112-210-00	6	4	1738-312-200-00	29	41	1738-601-004-20	46	46
1726-406-260-00	31	13	1738-312-220-10	29	5	1738-601-200-00	46	29
1726-434-001-00	37	33	1738-312-240-00	29	54	1738-601-210-00	46	16
1726-434-004-00	37	34	1738-312-260-00	29	55	1738-603-001-00	48	2
1726-508-230-00	43	7	1738-312-280-00	29	29	1738-606-230-00	49	1
1726-601-001-00	46	17	1738-312-290-00	29	30	1738-606-240-00	49	5
1726-601-003-00	46	24	1738-312-300-10	29	36	1738-606-250-00	49	9
1726-601-004-00	46	21	1738-312-310-00	29	20	1738-611-200-00	50	1
1726-601-005-00	46	11	1738-312-320-20	29	1	1738-611-210-10	50	5
1726-601-006-10	46	37	1738-317-210-00	64	1	1738-611-220-10	50	7
1726-601-007-00	46	2	1738-317-220-00	64	6	1738-626-200-10	51	1
1726-601-008-00	46	30	1738-406-200-00	31	7	1738-630-001-10	52	14
1726-601-009-00	46	32	1738-406-210-00	31	12	1738-630-002-10	52	16
1726-601-011-00	46	7	1738-406-230-00	31	27	1738-630-003-10	52	17
1726-601-012-00	46	3	1738-406-240-00	31	20	1738-630-011-00	52	22
1726-601-014-00	46	22	1738-410-001-00	32	3	1738-630-012-00	52	15
1726-601-200-20	46	1	1738-410-210-00	32	1	1738-630-200-20	52	1
1726-601-220-00	46	14	1738-411-210-00	33	1	1738-630-210-10	52	2
1726-601-240-10	46	31	1738-411-300-10	65	1	1738-660-001-00	53	12
1726-603-004-00	48	16	1738-431-210-00	34	1	1738-670-210-00	54	1
1726-630-300-10	52	3	1738-431-220-00	34	9	1738-670-220-00	54	2
1738-105-210-00	4	21	1738-431-230-00	34	10	1738-690-200-00	56	1
1738-112-210-00	6	1	1738-432-200-00	35	1	1738-690-202-00	56	8
1738-120-210-20	8	1	1738-433-001-00	36	1	1738-690-203-00	56	10
1738-122-200-20	9	1	1738-433-200-10	36	5	1738-702-300-00	57	1
1738-205-200-00	14	2	1738-501-001-00	39	20		69	2
1738-207-200-10	15	4	1738-502-001-00	40	3	1738-702-310-00	57	11
1738-212-002-00	20	1	1738-502-210-10	40	10		69	12
1738-216-003-00	21	19	1738-505-002-10	42	13	1738-702-320-00	57	12
1738-216-220-00	21	17	1738-505-200-00	42	1		69	13
1738-218-200-00	22	1	1738-505-210-10	42	4	1738-702-400-00	69	1
1738-255-001-00	23	41	1738-508-001-00	43	31	1738-901-001-00	58	1
	62	40	1738-508-210-00	43	1	1738-901-002-00	58	2
1738-255-002-00	23	40	1738-508-220-00	43	2	1738-901-003-00	58	4
	62	39	1738-508-230-00	43	23	1738-902-003-00	59	2
1738-255-200-10	62	1	1738-508-240-00	43	29	1738-902-006-00	59	11
1738-255-310-10	23	30	1738-514-001-00	44	4	1738-902-007-00	59	12
	62	29	1738-514-002-00	44	15		62	46

Numerical Index

Part Code	Fig.	Key	Part Code	Fig.	Key	Part Code	Fig.	Key
1738-904-001-00	60	14	3640-585-001-00	62	30	P103-601-005-00	46	20
1739-660-200-10	53	3	3650-270-214-00	54	12	P120-605-031-00	29	9
1739-660-212-00	53	7	3659-480-003-00	29	57	V120-264-001-20	54	16
1739-702-001-00	57	15	3668-612-001-00	29	37	V120-265-003-00	55	30
	69	16	3670-236-003-00	49	14	V120-266-002-00	49	15
1739-904-001-00	60	5	3670-520-008-00	23	38	V120-366-001-60	54	20
1740-313-300-00	29	23		62	37	V120-376-001-60	48	11
1740-313-301-00	29	27	3676-491-005-00	46	25		49	10
1740-602-051-00	47	5	3680-155-005-00	46	48	V120-376-002-00	48	8
1740-602-052-00	47	8	3737-172-011-00	56	23	V195-163-010-40	54	11
1740-602-053-00	47	10		56	27	V195-164-016-40	54	18
1740-602-054-00	47	11		56	28	V200-260-501-0B	5	7
1740-602-056-00	47	1	3740-162-005-00	47	14	V200-260-602-00	47	16
1740-602-057-00	47	3	3801-493-003-00	50	8	V200-360-604-00	23	34
1740-602-500-00	47	18	3821-262-202-00	56	4		62	33
1740-630-054-00	52	11	3821-262-204-00	56	5	V201-260-801-60	39	24
1740-630-055-00	52	12	3827-270-001-00	56	6	V201-260-802-00	46	39
1740-680-530-00	55	1	3827-270-002-00	56	9	V201-260-803-50	9	2
1740-680-550-00	55	8	4101-102-038-00	48	7		10	26
1740-903-053-00	59	10		49	3	V201-260-806-00	10	25
1740-903-055-10	59	9		49	7	V201-260-806-50	4	12
1750-208-001-10	16	6	7957-501-004-00	50	11	V201-260-808-00	3	13
1750-208-200-00	16	3	8654-901-002-00	60	9	V201-260-813-00	42	2
2130-713-002-10	7	10	J061-210-015-00	1	16	V201-261-001-60	6	12
2142-581-002-00	49	20	J061-224-032-00	1	12		56	12
2146-360-014-00	29	47		43	6	V201-261-006-00	25	8
2149-601-031-00	21	14	J061-230-038-00	1	9	V201-261-010-00	39	5
	23	33	J061-236-044-00	1	8	V201-261-203-00	44	38
	62	32		1	13	V201-261-204-00	25	3
2150-661-002-00	55	2	J061-242-050-00	3	8	V201-261-205-50	25	4
2161-331-001-00	58	5	J061-247-055-00	3	10	V201-261-206-00	25	5
2161-331-400-10	30	1	J062-081-087-00	4	20	V201-360-802-50	44	6
2161-331-401-10	30	2	J062-119-126-00	4	16	V201-361-009-00	23	2
2173-820-003-00	17	13		4	18		62	3
2186-536-211-00	55	5	K135-002-009-00	43	17	V201-361-202-50	8	9
2186-536-212-00	55	6	K135-017-006-00	43	12		26	9
2188-973-200-00	61	1	K135-023-000-00	43	10		33	2
2500-901-027-00	58	7	K135-023-100-00	43	11		37	40
2703-101-020-00	23	23	K211-001-000-00	41	8	V201-361-203-00	36	8
	62	23	K211-001-006-20	71	2		65	2
3610-440-018-00	46	6	K211-001-007-00	71	3	V201-361-203-50	70	2
3625-701-003-00	23	19	K211-001-008-00	71	4	V201-361-204-00	39	14
	62	21	K211-001-009-00	71	5		45	2
3640-585-001-00	21	13	K211-001-100-10	71	1		68	2
	23	31	K250-019-000-10	71	9	V201-361-204-50	51	3

Numerical Index

1738-097-100-00

Part Code	Fig.	Key	Part Code	Fig.	Key	Part Code	Fig.	Key
V201-361-206-00	39	15	V211-360-801-60	46	23	V252-341-003-00	10	3
V201-361-213-00	51	4		46	44		10	14
V203-361-002-00	8	7		46	47	V252-341-003-50	10	4
V203-361-002-50	32	5		48	6	V252-341-202-50	10	9
V203-361-003-00	2	3		49	4	V252-341-203-00	10	18
V210-360-601-20	1	24		49	8	V300-460-006-00	23	35
	34	12		52	23		62	34
	52	25		62	48	V301-260-006-00	6	7
V210-360-601-60	10	34	V211-360-802-00	1	20	V304-260-008-00	9	3
	21	20		2	6		9	11
	55	17		5	2		9	19
	55	18		49	2		15	6
	56	20		49	6		16	5
V210-360-602-00	23	29		50	2		29	11
	47	17		50	6		29	22
	62	28		52	13		29	32
V210-360-602-50	55	19		57	16		29	53
V210-560-603-00	43	26		69	17		43	21
V210-560-604-50	43	9	V211-360-802-50	5	9		46	9
V211-260-801-60	1	6		29	28		46	41
	1	26		37	32	V304-260-010-00	10	5
	4	22	V211-360-803-00	15	2		10	11
	5	14		33	7		10	15
	8	5		65	7		24	30
	8	18	V211-360-803-50	3	12		39	9
	9	18	V211-361-002-00	16	7		42	9
	41	21	V211-361-002-50	23	48	V304-260-012-00	27	8
V211-260-802-00	8	21	V211-361-003-50	10	21		29	46
	15	12	V211-361-004-00	39	4		70	4
V211-260-802-50	10	32	V211-361-004-50	39	6	V304-260-016-00	57	3
	39	19	V211-560-802-00	15	18		69	4
	52	5	V211-560-802-50	24	18	V304-460-008-00	21	16
V211-260-805-00	41	9	V211-561-001-60	41	6	V304-460-010-00	31	11
V211-261-002-00	21	18	V211-561-002-00	31	8		37	38
V211-261-002-50	52	4	V211-561-003-00	37	5	V304-460-012-00	10	19
V211-261-003-50	55	26		44	16		22	3
V211-360-801-60	6	2	V211-561-003-50	37	36	V304-460-014-00	53	14
	23	27	V211-660-802-50	28	13		57	14
	34	11	V233-361-201-60	23	25		69	15
	42	14		62	25	V305-260-008-00	40	9
	43	4	V251-261-202-5D	10	8		44	7
	43	28	V251-261-205-50	27	7	V305-260-012-00	44	11
	43	30	V251-341-002-8D	37	37	V327-262-110-00	30	3
	46	13	V251-341-003-00	31	9		31	25
	46	15	V252-261-005-50	10	10		38	5

Numerical Index

Part Code	Fig.	Key	Part Code	Fig.	Key	Part Code	Fig.	Key
V328-262-110-00	7	11	V401-160-012-00	10	20	V411-260-008-00	49	18
V334-260-010-00	72	14		22	2		62	41
V334-260-020-00	31	3		25	6	V411-260-010-00	6	13
V334-460-010-00	8	6		26	10		10	7
	31	6		33	3		10	13
V335-260-012-00	55	21		36	9		10	17
V350-160-006-00	46	35		37	41		25	10
	47	7		39	16		29	49
	47	13		44	39		30	4
	48	15		45	3		39	7
V360-260-006-00	48	12		51	2		41	7
	55	3		65	3		42	8
V361-260-006-00	49	16		68	3		50	9
V362-260-008-00	5	15		70	3		56	13
	53	8	V401-160-014-00	53	13	V411-260-012-00	25	7
V363-260-008-00	33	8		57	13		27	9
	65	8		69	14		44	40
V401-160-006-00	29	39	V401-160-016-00	57	4		51	5
V401-160-008-00	3	14		69	5	V411-260-014-00	31	14
	4	13	V401-160-020-00	31	4	V411-260-016-00	44	29
	10	27	V401-170-008-00	43	18		57	5
	18	3	V411-260-004-00	49	12		69	6
	18	11	V411-260-005-00	41	17	V500-161-601-50	52	21
	24	11	V411-260-006-00	6	8	V500-162-001-50	23	43
	34	8		7	3		41	13
	42	3		7	14		41	16
	43	22		9	7		62	42
V401-160-010-00	2	4		29	40	V500-162-002-00	7	4
	6	14		41	14		7	15
	8	8		46	18		9	8
	10	6		47	15		17	5
	10	12		48	5		27	5
	10	16	V411-260-008-00	4	14		29	15
	23	3		9	13		29	19
	24	31		10	28		29	35
	25	9		17	7		30	5
	31	10		18	4		46	19
	31	24		18	12	V500-162-502-00	29	50
	32	6		23	42		31	26
	37	39		27	4		38	6
	38	4		29	14		44	14
	39	8		29	18	V500-162-502-50	7	12
	56	14		34	13		21	4
	62	4		46	8		31	15
V401-160-012-00	8	10		46	40	V500-163-001-50	9	14

Numerical Index

1738-097-100-00

Part Code	Fig.	Key	Part Code	Fig.	Key	Part Code	Fig.	Key
V500-163-002-00	8	14	V600-110-630-40	12	12	V705-140-052-00	23	17
V500-164-002-50	44	28		14	3		35	7
V511-100-805-00	29	2		19	2		62	18
	29	42		23	14	V706-140-040-00	35	16
V522-100-801-80	10	29		62	16		40	5
	15	3	V600-110-630-50	37	8	V706-140-050-00	35	15
	25	11	V600-110-630-60	26	5	V707-140-055-00	37	16
	39	10	V600-110-690-70	37	13	V707-140-062-00	37	9
V523-100-801-60	24	9	V607-110-620-40	11	8	V707-140-080-00	26	8
V523-101-002-40	10	31	V607-110-620-50	19	8	V720-101-900-70	39	21
	23	4	V607-110-630-40	20	5		41	20
	37	6	V653-622-282-00	13	2	V720-101-900-90	57	9
	37	31	V654-416-201-70	11	5		69	10
	37	35	V682-200-001-00	17	4	V720-102-401-00	4	4
	62	5		18	8		18	5
V530-240-502-40	24	26		18	18		18	13
V580-140-403-60	39	22		21	3		24	28
V580-140-502-00	17	9		23	21		41	23
	42	12		62	13	V720-102-401-40	17	14
V580-140-502-50	21	11	V682-200-001-90	28	4		21	7
	35	12		28	8		23	24
V580-140-503-20	17	16	V704-140-014-00	18	14		62	24
	44	22	V704-140-020-00	11	9	V720-102-401-60	25	13
V580-140-601-60	13	6		19	15	V720-102-401-80	28	10
V580-140-602-50	23	45		20	7	V720-103-504-20	36	4
	62	44	V704-140-022-00	13	4	V720-103-504-40	4	8
V580-140-602-80	8	24		29	3	V720-105-705-50	41	2
V580-140-604-00	23	10		29	56	V720-111-900-60	43	16
	62	10	V704-140-025-00	11	6		71	8
V600-110-600-50	37	11		19	9	V720-112-401-20	39	12
	37	23		23	12		39	18
V600-110-600-80	37	14		23	39		71	7
V600-110-600-90	24	12		31	19	V720-112-401-80	43	32
V600-110-601-00	24	13		35	5		57	7
	35	14		37	29		69	8
V600-110-620-40	11	3		62	15	V720-112-402-00	43	8
	14	4		62	38		43	25
	19	11	V704-140-030-00	26	7	V720-112-402-20	43	15
V600-110-620-50	23	16	V704-140-035-00	37	15	V720-113-502-80	43	3
	35	2		40	6	V721-103-107-00	36	7
	37	27	V705-140-028-00	15	10	V721-103-109-00	37	4
	62	17	V705-140-047-00	37	3	V721-103-111-50	28	12
V600-110-620-60	24	21		37	19	V721-113-105-00	43	14
	37	28	V705-140-052-00	12	13	V721-113-106-00	39	13
V600-110-620-80	26	6		19	3	V723-101-501-40	16	2

Numerical Index

Part Code	Fig.Key		Part Code	Fig.Key	Part Code	Fig.Key
V723-102-003-00	15	11				
V742-135-500-60	40	2				
V744-114-280-70	43	13				
V744-120-350-70	8	2				
	11	2				
	14	5				
V744-135-520-80	23	18				
	62	20				
V744-135-550-80	20	8				
V760-150-000-00	29	38				
V763-150-000-00	8	3				
	9	4				
	29	7				
V780-140-000-10	32	4				
V780-140-000-1T	71	6				
V781-160-000-6B	23	5				
	62	26				
V782-160-000-2T	8	4				
	43	24				
V782-160-000-4B	37	20				
V881-005-001-20	66	4				
	66	9				
V889-000-081-60	64	4				
	64	9				
V999-200-003-00	63	5				
	63	10				
	64	5				
	64	10				
	66	5				
	66	10				
	67	5				
	67	10				

Alpabetical Index

6003-097-240-00

Description	Fig.	Key
ADAPTER/210X070 ASSY	22	1
ARM/CONTROL	20	27
ARM/FLOATING COMP	20	18
ARM/TENSION	22	2
ARMATURE/STARTE ASSY	28	5
BALL	1	5
BEARING,BALL	29	4
BEARING,RB/6002SS	15	8
BEARING,RB/6004	20	12
BEARING,RB/6005	9	51
BEARING,RB/6203	20	11
BEARING,THRUST CRANK	5	13
BEARING,THRUST CRANK	6	2
BEARING,THRUST CRANK	6	4
BEARING/CONNECTING R	6	5
BEARING/CONNECTING R	6	6
BEARING/CONNECTING R	13	7
BEARING/CRANK/LOWER	5	12
BEARING/CRANK/UPPER	5	11
BEARING/NEEDLE	28	8
BEARING/NEEDLE	28	9
BEARING/OILLESS	28	12
BEARING/OILLESS	28	14
BEARING/OILLESS	28	16
BEARING/WATER PUMP	17	3
BEARING/WATERPUMP	17	4
BEARING/WITH SHOCKAB	28	13
BELT VHM034	18	5
BODY/OILPUMP	16	2
BODY/WATERPUMP	17	2
BOLT	5	2
BOLT	9	45
BOLT	11	18
BOLT	15	13
BOLT	15	16
BOLT	16	7
BOLT	27	54
BOLT,JOINT	16	13
BOLT,SEMS/M10X20	8	4
BOLT,SEMS/M6X12	12	5
BOLT,SEMS/M6X12	20	14
BOLT,SEMS/M8X25 7T	4	3
BOLT/CONNECTINGROD	13	6
BOLT/FLANGE	10	2
BOLT/FLANGE	15	9
BOLT/FLANGE	23	6
BOLT/M10X1.25X82	1	7
BOLT/M6	9	34
BOLT/M6	9	35
BOLT/M6X10	20	16
BOLT/M6X18	20	7
BOLT/THROUGH	28	30
BOLT/WS	16	6
BOLT/WS	18	4
BOLT/WS	23	9
BRACKET ROCKER SHAFT	11	12
BRACKET,ROCKER SHAFT	11	13
BRUSH/STARTER	28	2
CAMSHAFT/INJPUMP	20	8
CAP	29	13
CAP,BLANK/30	9	40
CAP,OIL FILLER	2	2
CAP,SEALING	1	2
CARTRIDGE/OILFILTER	16	15
CENTER CRANK PULLEY	15	12
CLAMP	29	9
CLAMP,STRAINER	16	10
CLAMP/WIRE/10-15	17	21
CLUTCH/STARTER ASSY	28	6
COLLAR	29	5
CONNECTINGROD ASSY	13	5
CONNECTOR/FUEL	21	1
CONNECTOR/GLOWPLUG	24	4
CONNECTOR/OILFILTER	9	2
CONTROLROD	27	48
CONTROLSLEEVE	27	51
COUPLER	29	10
COVER	9	54
COVER	28	11
COVER/CYLINDER HEAD	2	1
COVER/INJECTIONPUMP	5	24
CRANKSHAFT ASSY	15	1
CUP/SEALING/12	5	7
CUP/SEALING/16	9	4
CUP/SEALING/28	5	3
CUP/SEALING/36	5	4
CUTTER,VALVE	11	5
CYLINDERBLOCK ASSY	5	1
CYLINDERHEAD ASSY	1	1
DELIVERYVALVE	27	3
DOWEL	5	21
DRIVE/TACHOMETE ASSY	9	37
EYEBOLT	27	52
FAN/COOLING	18	1
FLANGEBOLT	3	3
FLANGEBOLT	3	4
FLANGEBOLT	5	26
FLANGEBOLT	7	4
FLANGEBOLT	9	10
FLANGEBOLT	9	11
FLANGEBOLT	9	13
FLANGEBOLT	9	14
FLANGEBOLT	9	15
FLANGEBOLT	9	17
FLANGEBOLT	9	39
FLANGEBOLT	11	19
FLANGEBOLT	16	11
FLANGEBOLT	17	13
FLANGEBOLT	17	18
FLANGEBOLT	17	24
FLANGEBOLT	17	25
FLANGEBOLT	17	29
FLANGEBOLT	23	4
FLANGEBOLT	24	7
FLYWEIGHT	20	15
FLYWHEEL ASSY	15	5
FRAME/COMMUTATOR END	28	10
GASKET	2	5
GASKET	17	8
GASKET	24	6
GASKET	25	5
GASKET	25	22
GASKET	26	17
GASKET	27	5
GASKET	27	53
GASKET	27	55
GASKET	27	57
GASKET,EXH.MANIFOLD	4	2
GASKET,EXH.MANIFOLD	25	7
GASKET,INLET MANIFOL	3	2
GASKET,INLET MANIFOL	25	6
GASKET,NOZZLE	19	2
GASKET/COVER	5	25
GASKET/COVER	9	55
GASKET/COVER	25	11

Alpabetical Index

6003-097-240-00

Description	Fig.	Key
GASKET/CYLINDERHEAD	1	6
GASKET/CYLINDERHEAD	25	3
GASKET/GEARCASE	9	29
GASKET/GEARCASE	25	14
GASKET/HOUSING	17	23
GASKET/HOUSING	25	20
GASKET/PLATE	9	44
GASKET/PLATE	25	15
GASKET/SPACER	17	16
GASKET/SPACER	25	19
GASKET/WATER PUMP	17	12
GASKET/WATER PUMP	25	18
GEAR/CAMSHAFT	12	2
GEAR/CRANK	15	3
GEAR/IDLE ASSY	12	6
GEAR/INJECTIONPUMP	20	9
GEAR/OILPUMP ASSY	16	3
GEAR/STARTER PLANETA	28	17
GEAR/STARTERINTERNAL	28	18
GEARCASE ASSY	9	1
GENERATOR/12V-8.5A	23	1
GLOWPLUG	24	3
HANGER	10	1
HOLDER DELIVERY VALV	27	6
HOLDER/JE/9-9	9	16
HOLDER/NOZZLE ASSY	26	1
HOLDER/STARTER ASSY	28	3
HOSE/RABBER	2	6
HOSE/RUBBER	17	20
HOUSING,PUMP	27	1
HOUSING/STARTER ASSY	28	7
HOUSING/THERMOSTAT	17	22
INJECTIONNOZZLE ASSY	19	1
INJECTIONPUMP ASSY	20	1
KEY/07X05X09	12	3
KEY/07X05X09	20	10
KEY/07X05X43	15	4
LEVELGAGE	5	28
LEVER/CONTROL COMP	20	24
LEVER/PINIONDRIVE	28	19
LINK,CONTROL	20	19
MANIFOLD(INLET) ASSY	3	1
MANIFOLD,EXH	4	1
METAL,CRANK SET	5	10
METAL,CRANK SET	6	1
METAL,CRANK SET	6	3
NIPPLE	5	22
NOZZLE	26	16
NUT	9	36
NUT	11	17
NUT	20	28
NUT	26	18
NUT	28	28
NUT	28	29
NUT	28	34
NUT	29	8
NUT,CAP/M 8	9	21
NUT/CAP	2	4
NUT/M08	9	12
NUT/M08	11	20
NUT/M08	17	14
NUT/M08	17	19
NUT/M10	23	7
NUT/M8	9	20
NUT/M8	9	52
NUT/M8	9	56
NUT/M8	28	32
NUT/NOZZLERETAINING	26	15
NUT/PINIONSTOP	28	23
O-RING	9	42
O-RING	17	28
O-RING	25	21
O-RING 1A S50	9	47
O-RING 1A S50	25	16
O-RING/P 8	20	25
O-RING/P15	16	9
O-RING/P15	25	17
O-RING/P18	7	3
OILPAN COMP	7	1
OILPUMP ASSY	16	1
OILSEAL	5	14
OILSEAL	25	10
ORING	27	7
ORING	27	10
PACKING	9	22
PACKING	16	14
PACKING	25	13
PIN	5	17
PIN	9	25
PIN	15	2
PIN	27	9
PIN	27	13
PIN,CONTROL	20	20
PIN,GROOVE	9	28
PIN,PISTON	13	3
PIN,STARTING SPRING	5	27
PIN/ARM	9	23
PIN/IDLEGEAR	5	6
PIN/SNAP	9	24
PIN/STRAIGHT	5	16
PIN/STRAIGHT	5	18
PIN/STRAIGHT	8	3
PIN/STRAIGHT	9	8
PIN/STRAIGHT	15	7
PIN/STRAIGHT	16	5
PIN/TUBE	5	15
PIN/TUBE	9	48
PIPE,OIL	16	12
PIPE,WATER OUTLET	17	27
PIPE/FUEL	21	2
PIPE/INJECTION ASSY	19	3
PIPE/INJECTION ASSY	19	4
PIPE/INJECTION ASSY	19	5
PIPE/WATER PUMP	17	11
PIPE/WATERDRAIN	5	23
PISTON	13	1
PISTON/OV	14	1
PISTON/OV	14	3
PISTON/VALVE/RELIEF	9	31
PLATE	27	49
PLATE	28	27
PLATE COMP	29	1
PLATE,THRUST	12	4
PLATE,THRUST INJPUMP	20	13
PLATE/ADJUST	23	3
PLATE/FRONT	9	43
PLATE/REAR	8	1
PLATE/T=1.80	27	18
PLATE/T=1.825	27	33
PLATE/T=1.85	27	19
PLATE/T=1.875	27	34
PLATE/T=1.90	27	20
PLATE/T=1.925	27	35
PLATE/T=1.95	27	21
PLATE/T=1.975	27	36

Alpabetical Index

6003-097-240-00

Description	Fig.	Key
PLATE/T=2.00	27	22
PLATE/T=2.025	27	37
PLATE/T=2.05	27	23
PLATE/T=2.075	27	38
PLATE/T=2.10	27	24
PLATE/T=2.125	27	39
PLATE/T=2.15	27	25
PLATE/T=2.175	27	40
PLATE/T=2.20	27	26
PLATE/T=2.225	27	41
PLATE/T=2.25	27	27
PLATE/T=2.275	27	42
PLATE/T=2.30	27	28
PLATE/T=2.325	27	43
PLATE/T=2.35	27	29
PLATE/T=2.375	27	44
PLATE/T=2.40	27	30
PLATE/T=2.425	27	45
PLATE/T=2.45	27	31
PLATE/T=2.475	27	46
PLATE/T=2.50	27	32
PLATE/T=2.525	27	47
PLATE/WATER PUMP	17	9
PLUG	5	5
PLUG	9	3
PLUG	11	11
PLUG	27	56
PLUG/M14X1.5	7	2
PLUG/PT1/2	1	3
PLUG/PT3/4	5	30
PLUG/SCREW	9	26
PLUNGER ASSY	27	2
POINTER	8	2
PULLEY	15	11
PULLEY ASSY	15	10
PULLEY COMP	29	3
PULLEY,WATER PUMP	18	2
REGULATOR	23	2
RELAY,SOLENOID	24	8
REPAIR/ENGINESET	25	1
RING,SNAP	13	4
RING,SNAP	27	14
RING,SNAP/ 4 E	20	21
RING,SNAP/12 C	9	33
RING,SNAP/16 C	11	15
RING/O	9	38
RING/PISTON SET	13	2
RING/PISTON/OV SET	14	2
RING/PISTON/OV SET	14	4
RING/SNAP	28	21
RING/SNAP	28	22
RINGGEAR	15	6
ROCKERARM	11	9
ROCKERSHAFT ASSY	11	8
ROD,PUSH	11	7
ROTOR/OUTER	16	4
ROTOR/WATERPUMP	17	6
SCREW	27	11
SCREW	27	50
SCREW	28	33
SCREW	29	11
SCREW	29	12
SCREW ADJUST	11	16
SCREW/WATER PUMP	17	10
SEAL SET/WATER PUMP	17	5
SEAL,BEARING CAP	5	8
SEAL,BEARING CAP	25	8
SEAL,BEARING CAP/7	5	9
SEAL,BEARING CAP/7	25	9
SEAL,CYL.HEAD COVER	2	3
SEAL,CYL.HEAD COVER	25	4
SEAL,OIL	1	4
SEAL,OIL	9	9
SEAL,OIL	25	2
SEAL,OIL	25	12
SEAL/WATER PUMPPULLE	17	7
SEAT,SPRING	26	13
SEAT,SPRING	27	16
SEAT,SPRING	27	17
SEAT,VALVE SPRING	11	4
SHAFT,CAM	12	1
SHAFT/HYDRAULIC ASSY	9	50
SHAFT/ROCKERARM ASSY	11	10
SHAFT/STARTER PLANET	28	15
SHIM/0.10	26	2
SHIM/0.20	26	3
SHIM/0.30	26	4
SHIM/0.40	26	5
SHIM/0.50	26	6
SHIM/0.52	26	7
SHIM/0.54	26	8
SHIM/0.56	26	9
SHIM/0.58	26	10
SHIM/0.80	26	11
SHIM/INJECTION P/0.1	20	3
SHIM/INJECTION P/0.2	20	4
SHIM/INJECTION P/0.3	20	2
SHIM/INJECTION P/0.4	20	5
SHIM/INJECTION P/0.5	20	6
SLEEVE,FRANGE	27	8
SOLENOID	24	5
SPACER	9	46
SPACER	26	14
SPACER,OIL FILTER	9	41
SPACER,WATER PUMP	17	15
SPACER/FAN/48	18	3
SPRING	11	14
SPRING DELIVERY VALV	27	4
SPRING,NOZZLE	26	12
SPRING,PLUNGER	27	15
SPRING,RETURN	20	26
SPRING,SETTING	20	22
SPRING/GOVERNER	20	23
SPRING/RELIEF VALVE	9	32
SPRING/STARTERBRUSH	28	4
SPRING/STARTING	20	31
SPRING/VALVE	11	3
STARTER	29	2
STARTER ASSY	23	8
STOPPER/FULLLOAD	9	19
STRAINER	16	8
STUD	1	8
STUD	5	19
STUD	5	29
STUD	9	5
STUD	9	6
STUD	9	7
STUD	9	49
STUD	17	17
STUD/M8X40	5	20
SWITCH/MAGNETIC ASSY	28	20
SWITCH/OILPRESSURE	24	1
SWITCH/OVERHEAT	24	2
TAPPET	11	6
TAPPET	27	12

Alpabetical Index

Description	Fig.	Key	Description	Fig.Key	Description	Fig.Key
THERMOSTAT	17	26				
THRUSTPIECE	20	17				
VALVE/EXHAUST	11	2				
VALVE/INTAKE	11	1				
VALVE/RELIEF ASSY	9	30				
WASHER	15	15				
WASHER	28	31				
WASHER	29	6				
WASHER	29	7				
WASHER / M6	20	29				
WASHER,SP/M 6	20	30				
WASHER,SP/M 8	9	53				
WASHER,SP/M 8	9	57				
WASHER,SP/M6	15	14				
WASHER/08X14X01	9	18				
WASHER/08X14X01	9	27				
WASHER/08X14X01	25	23				
WASHER/9X22X2	23	5				
WASHER/SK	28	24				
WASHER/SK	28	25				
WASHER/SK	28	26				
WATERPUMP ASSY	17	1				
YOKE/STARTER ASSY	28	1				

Alpabetical Index

1738-097-100-00

Description	Fig.	Key
ADAPTER/BOLT/G3/8	43	31
ARM,SHIFT	17	11
ARM/BRAKE/LH COMP	29	54
ARM/BRAKE/RH COMP	29	55
ARM/DIEF COMP	27	1
ARM/DIFFLOCK	24	29
ARM/KNUCKLE/LH	37	33
ARM/KNUCKLE/RH	37	34
ARM/LIFT	40	4
ARM/MIRROR ASSY	52	24
ARM/PITMAN	31	2
ARM/PLATE	46	7
ARM/POSITION COMP	42	4
ARM/POSITION COMP	42	11
ARM/PTO COMP	21	9
ARM/PTO/MID ASSY	23	36
ARM/PTO/MID ASSY	62	35
ARM/SHIFT/MAIN COMP	15	13
ARM/SHIFT/MID COMP	23	20
ARM/SHIFT/MID COMP	23	44
ARM/SHIFT/MID COMP	62	22
ARM/SHIFT/MID COMP	62	43
ARM/SHIFT/PTO COMP	21	6
ARM/SHIFT/SUB COMP	16	1
ARM/STEERING ASSY	31	16
ARM/SUB COMP	16	3
BALL	17	4
BALL	18	8
BALL	18	18
BALL	21	3
BALL	23	21
BALL	28	4
BALL	28	8
BALL	62	13
BAND	6	16
BAND	6	17
BAND	56	15
BAND	56	21
BAND	56	25
BAND,WIRE/140	6	10
BAND,WIRE/140	6	15
BAND,WIRE/140	56	11
BAND,WIRE/140	56	16
BAND,WIRE/140	56	19
BAND,WIRE/140	56	24
BAND,WIRE/140	56	26
BAND,WIRE/140	56	29
BAND,WIRE/140	56	31
BAND,WIRE/250	56	18
BAND,WIRE/250	56	30
BAND/CLEANER	3	6
BATTERY/46B24R ASSY	6	4
BEARING	12	3
BEARING	15	9
BEARING	37	13
BEARING,BALL	72	10
BEARING,BALL	72	11
BEARING,CLUTCH RS	8	17
BEARING,NEEDLE	12	8
BEARING,NR/KT162017	11	5
BEARING,NR/TLA222820	13	2
BEARING,RB/6005	37	11
BEARING,RB/6005	37	23
BEARING,RB/6008	37	14
BEARING,RB/6009	24	12
BEARING,RB/6010	24	13
BEARING,RB/6010	35	14
BEARING,RB/6204	11	3
BEARING,RB/6204	14	4
BEARING,RB/6204	19	11
BEARING,RB/6204NR	11	8
BEARING,RB/6205	23	16
BEARING,RB/6205	35	2
BEARING,RB/6205	37	27
BEARING,RB/6205	62	17
BEARING,RB/6205NR	19	8
BEARING,RB/6206	24	21
BEARING,RB/6206	37	28
BEARING,RB/6208	26	6
BEARING,RB/6304	12	12
BEARING,RB/6304	14	3
BEARING,RB/6304	19	2
BEARING,RB/6304	23	14
BEARING,RB/6304	62	16
BEARING,RB/6304NR	20	5
BEARING,RB/6305	37	8
BEARING,RB/6306	26	5
BEARING/BALL	11	4
BEARING/BALL 6305SH2	12	2
BEARING/BALL 6305SH2	20	3
BEARING/NEEDLE	19	13
BEARING/NEEDLE	23	8
BEARING/NEEDLE	62	8
BLOT/M14X10	15	20
BLUB/12V-21/5W	53	7
BOARD/WIREING ASSY	54	10
BOLT	2	3
BOLT	23	34
BOLT	32	5
BOLT	39	15
BOLT	51	4
BOLT	62	33
BOLT	72	19
BOLT(S) M10X25	52	4
BOLT(S)7	41	6
BOLT(SP)/M6X16	10	34
BOLT(SP)/M6X16	21	20
BOLT(SP)/M6X16	55	17
BOLT(SP)/M6X16	55	18
BOLT(SP)/M6X16	56	20
BOLT,ADJUST	72	16
BOLT,SEMS	1	24
BOLT,SEMS	16	7
BOLT,SEMS	21	18
BOLT,SEMS	34	12
BOLT,SEMS	39	4
BOLT,SEMS	52	25
BOLT,SEMS	55	26
BOLT,SEMS (SP)	6	2
BOLT,SEMS (SP)	23	27
BOLT,SEMS (SP)	34	11
BOLT,SEMS (SP)	42	14
BOLT,SEMS (SP)	43	4
BOLT,SEMS (SP)	43	28
BOLT,SEMS (SP)	43	30
BOLT,SEMS (SP)	46	13
BOLT,SEMS (SP)	46	15
BOLT,SEMS (SP)	46	23
BOLT,SEMS (SP)	46	44
BOLT,SEMS (SP)	46	47
BOLT,SEMS (SP)	48	6
BOLT,SEMS (SP)	49	4
BOLT,SEMS (SP)	49	8
BOLT,SEMS (SP)	52	23
BOLT,SEMS (S) M8X16	1	6

Alpabetical Index

Description	Fig.	Key
BOLT,SEMS (S) M8X16	1	26
BOLT,SEMS (S) M8X16	4	22
BOLT,SEMS (S) M8X16	5	14
BOLT,SEMS (S) M8X16	8	5
BOLT,SEMS (S) M8X16	8	18
BOLT,SEMS (S) M8X16	9	18
BOLT,SEMS (S) M8X16	41	21
BOLT,SEMS(SP)	62	48
BOLT,SEMS/M8X25 7T	24	18
BOLT,SM/M08X25	15	5
BOLT,SM/M08X25	16	4
BOLT,SM/M08X25	40	8
BOLT/ADJUST	29	10
BOLT/ADJUST	72	15
BOLT/BATTERY	6	5
BOLT/KNOB/M06X13	47	19
BOLT/KNOB/M06X27	52	20
BOLT/M 6X20	47	16
BOLT/M 8X130	42	2
BOLT/M 8X16	39	24
BOLT/M 8X20	46	39
BOLT/M 8X25	44	6
BOLT/M 8X35	9	2
BOLT/M 8X35	10	26
BOLT/M 8X60	10	25
BOLT/M 8X65	4	12
BOLT/M 8X80	3	13
BOLT/M06X08/APSET	4	10
BOLT/M10X1.25X20	8	7
BOLT/M10X100	39	5
BOLT/M10X16	6	12
BOLT/M10X16	56	12
BOLT/M10X20	31	8
BOLT/M10X30	37	5
BOLT/M10X30	44	16
BOLT/M10X35	10	4
BOLT/M10X35	10	21
BOLT/M10X45	39	6
BOLT/M10X55	10	10
BOLT/M10X60	25	8
BOLT/M10X90	23	2
BOLT/M10X90	62	3
BOLT/M12X25	8	9
BOLT/M12X25	26	9
BOLT/M12X25	33	2
BOLT/M12X25	37	40
BOLT/M12X30	10	18
BOLT/M12X30	36	8
BOLT/M12X30	44	38
BOLT/M12X30	65	2
BOLT/M12X35	70	2
BOLT/M12X40	25	3
BOLT/M12X40	39	14
BOLT/M12X40	45	2
BOLT/M12X40	68	2
BOLT/M12X45	51	3
BOLT/M12X55	25	4
BOLT/M12X60	25	5
BOLT/M4X12	54	16
BOLT/M5X16	48	4
BOLT/M5X30	55	30
BOLT/M8X20	15	18
BOLT/M8X25	18	2
BOLT/M8X25	18	10
BOLT/M8X25	24	10
BOLT/M8X25	28	13
BOLT/M8X28 11T	43	17
BOLT/M8X30	17	6
BOLT/M8X45	21	15
BOLT/M8X50	41	9
BOLT/S	8	21
BOLT/S	10	32
BOLT/S	15	12
BOLT/S	37	36
BOLT/S	39	19
BOLT/S	43	9
BOLT/S	43	26
BOLT/S	52	5
BOLT/S	72	5
BOLT/SEAL	5	7
BOLT/SET/M16X60	57	2
BOLT/SET/M16X60	69	3
BOLT/SM/M8X1.25X30	34	7
BOLT/SP	1	20
BOLT/SP	2	6
BOLT/SP	3	12
BOLT/SP	5	2
BOLT/SP	5	9
BOLT/SP	15	2
BOLT/SP	23	29
BOLT/SP	23	48
BOLT/SP	29	28
BOLT/SP	33	7
BOLT/SP	37	32
BOLT/SP	47	17
BOLT/SP	49	2
BOLT/SP	49	6
BOLT/SP	50	2
BOLT/SP	50	6
BOLT/SP	52	13
BOLT/SP	55	19
BOLT/SP	57	16
BOLT/SP	62	28
BOLT/SP	65	7
BOLT/SP	69	17
BOLT/STUD	10	3
BOLT/STUD	10	9
BOLT/STUD	10	14
BOLT/STUD	27	7
BOLT/STUD	31	9
BOLT/STUD/M10X35	31	5
BOLT/STUD/SEAL	10	8
BOLT/STUD/SEAL	37	37
BOOT	9	15
BOOT	55	24
BOOT,CHANGE	15	15
BOOT/HORN	55	13
BOOT/STEERING	48	9
BOX ASSY	72	1
BRACKET COMP	8	11
BRACKET COMP	46	16
BRACKET/AXLE ASSY	32	1
BRACKET/BATTERY COMP	6	1
BRACKET/CLEANER COMP	3	11
BRACKET/COUPLER/7P	55	25
BRACKET/FILTER COMP	4	21
BRACKET/GRILLE COMP	47	18
BRACKET/LAMP	53	12
BRACKET/LEVER COMP	5	13
BRACKET/LEVER COMP	42	1
BRACKET/RADIATO COMP	1	25
BRACKET/REAR COMP	31	27
BRACKET/REFLECTOR	49	9
BRACKET/SEAT COMP	50	7
BRACKET/SEAT/F COMP	50	5

Alpabetical Index

1738-097-100-00

Description	Fig.	Key
BRACKET/SEAT/R COMP	50	1
BRACKET/STEERIN COMP	31	7
BRACKET/TANK COMP	5	8
BULB	54	12
BULB/12V/45/40W	53	2
BULB/12V/5W	53	10
BULB/12V21W	53	4
BULB/12V21W	53	6
BULB/12V5W	53	5
BULB/LAMP/12V/1.7W	54	14
BUSH	29	37
BUSH,LEVER	6	3
BUSH,LEVER	46	42
BUSH/25X28X25	31	17
BUSH/25X28X27	23	37
BUSH/25X28X27	62	36
BUSH/35X39X26	32	2
BUSH/35X39X30	39	3
BUSH/40X43X30	39	2
BUSH/62X67X30	36	6
BUSH/COLUMN	72	12
BUTTON	29	26
CABLE	33	6
CABLE	65	6
CABLE ASSY	54	21
CABLE/ACCELERATOR	7	13
CABLE/BATTERY ASSY	6	9
CABLE/EARTH	6	11
CABLE/HOOD COMP	46	3
CABLE/PEDAL ASSY	7	2
CAM,DIFF-LOCK	24	25
CAP	1	3
CAP	4	6
CAP,BLANK/52	23	19
CAP,BLANK/52	62	21
CAP,OIL ASSY	36	2
CAP,PTO SHAFT	10	33
CAP,PTO SHAFT	23	28
CAP,PTO SHAFT	62	27
CAP,TIRE VALVE	63	5
CAP,TIRE VALVE	63	10
CAP,TIRE VALVE	64	5
CAP,TIRE VALVE	64	10
CAP,TIRE VALVE	66	5
CAP,TIRE VALVE	66	10
CAP,TIRE VALVE	67	5
CAP,TIRE VALVE	67	10
CAP/FUEL ASSY	5	4
CAP/OIL/30	50	3
CAP/PARKING	46	38
CAP/SEAL/47	37	2
CAP/SEAL/47	37	18
CAP/STEERING	30	2
CASE ASSY	54	19
CASE,DIFF	24	1
CASE,SPRING	17	2
CASE,SYLINDER	39	1
CASE/DIFF	35	8
CASE/FINAL	37	1
CASE/FINAL	37	17
CASE/JOINT/A COMP	34	9
CASE/JOINT/B COMP	34	10
CASE/PTO/MID	23	1
CASE/PTO/MID	62	2
CASE/STEERING ASSY	31	1
CASE/TRANSMISSION/F	10	1
CASE/TRANSMISSION/RE	10	2
CHAIN,CHECK RH	44	10
CHAIN/CHECK/148 COMP	44	8
CLAMP,HARNESS	56	23
CLAMP,HARNESS	56	27
CLAMP,HARNESS	56	28
CLAMP/32	2	5
CLAMP/WIRE/10-15	1	16
CLAMP/WIRE/24-32	1	12
CLAMP/WIRE/24-32	43	6
CLAMP/WIRE/30-38	1	9
CLAMP/WIRE/36-44	1	8
CLAMP/WIRE/36-44	1	13
CLAMP/WIRE/42-50	3	8
CLAMP/WIRE/47-55	3	10
CLEANER/AIR ASSY	3	1
CLIP	3	5
CLIP(B)	48	19
CLIP(B)	49	17
CLIP(B)	52	9
CLIP/HOSE/11.9-12.6	4	16
CLIP/HOSE/11.9-12.6	4	18
CLIP/HOSE/8.1-8.7	4	20
CLUTCH	19	4
CLUTCH/DIFFLOCK	24	22
COLLAR	55	2
COLLAR,PINION THRUST	24	4
COLLAR,SHIFTER	23	23
COLLAR,SHIFTER	62	23
COLLAR,THRUST	12	11
COLLAR,THRUST	24	6
COLLAR/21X36X1	23	9
COLLAR/21X36X1	62	9
COLLAR/22X34X2	13	3
COLLAR/25X32X3	12	5
COLLAR/25X32X3	35	3
COLLAR/26X36X3	19	5
COLLAR/48X52X17	35	4
CONNECTOR	1	17
COUPLING/16X27X62	8	23
COVER	46	28
COVER ASSY	3	2
COVER,DUST	31	23
COVER,DUST	38	3
COVER,PUMP	43	12
COVER,SIDE	72	6
COVER/CHANGE	52	14
COVER/CLUTCH/18 COMP	8	19
COVER/DUSH/F	48	1
COVER/DUSH/R	48	2
COVER/DUSH/REAR	48	13
COVER/FUSE	56	6
COVER/LH	52	16
COVER/PLATE	23	47
COVER/PLATE	48	10
COVER/RH	52	17
COVER/SAFETY/LH/F	46	43
COVER/SAFETY/LH/R	46	45
COVER/SAFETY/RH	46	46
COVER/SHIELD COMP	22	1
COVER/SIDE/LH COMP	46	29
COVER/SIDE/RH COMP	46	31
COVER/SWITCH	55	7
COVER/TOP ASSY	72	2
COVER/WHEEL	37	30
CRANK/LIFT	40	3
CUM/BRAKE COMP	28	9
CUSHION,RUBBER	3	15
DISK/CLUTCH/184 COMP	8	20

Alpabetical Index

Description	Fig.	Key
ELEMENT	4	9
ELEMENT ASSY	3	3
ESCUTCHEON	54	7
FENDER/LH COMP	49	1
FENDER/RH COMP	49	5
FILTER/FUEL	4	1
FILTER/SUCTION COMP	43	1
FLANGEBOLT	23	25
FLANGEBOLT	62	25
FLASHER ASSY	55	16
FORK	44	19
FORK/BRACKET COMP	44	24
FORK/RELEASE	8	12
FORK/SHIFT/1ST	18	6
FORK/SHIFT/2ND	18	15
FORK/SHIFT/DIFFLOCK	24	23
FORK/SHIFT/FRONT	17	1
FORK/SHIFT/SUB	18	16
FRAME/LH COMP	57	11
FRAME/LH COMP	69	12
FRAME/REAR COMP	51	1
FRAME/RH COMP	57	12
FRAME/RH COMP	69	13
FRAME/SF-182 SET	69	1
FRAME/UPPER COMP	57	1
FRAME/UPPER COMP	69	2
FUNNEL ASSY	61	1
FUSE/BLADE/32V10A	56	4
FUSE/BLADE/32V20A	56	5
FUSE/SLOWBLOW	56	3
FUSE/SLOWBLOW/30A	56	2
GASKET	2	2
GAUGE/FUEL ASSY	5	5
GAUGE/OIL	15	19
GEAR	54	4
GEAR PUMP SET	43	11
GEAR,WHEEL/58	26	2
GEAR/BEVEL/11	37	7
GEAR/BEVEL/12	37	22
GEAR/BEVEL/14	24	5
GEAR/BEVEL/15	35	10
GEAR/BEVEL/15	37	10
GEAR/BEVEL/47	37	25
GEAR/SPUR/11/LH	24	19
GEAR/SPUR/11/RH	24	20
GEAR/SPUR/14-33	11	12
GEAR/SPUR/15	11	1
GEAR/SPUR/15	23	13
GEAR/SPUR/15	62	12
GEAR/SPUR/16-34	12	6
GEAR/SPUR/17-24	12	7
GEAR/SPUR/18-20	19	12
GEAR/SPUR/19	19	10
GEAR/SPUR/19	20	4
GEAR/SPUR/19-25	11	10
GEAR/SPUR/20	14	1
GEAR/SPUR/20-23	13	1
GEAR/SPUR/30	12	9
GEAR/SPUR/32	11	11
GEAR/SPUR/33	12	10
GEAR/SPUR/33 COMP	19	6
GEAR/SPUR/34	23	7
GEAR/SPUR/34	62	7
GLASS	54	8
GLIP/YELLOW	21	13
GLIP/YELLOW	23	31
GLIP/YELLOW	62	30
GRILLE	47	1
GRIP	49	14
GRIP/03X17X97	42	15
GRIP/12X50	15	7
GRIP/MAIN	16	8
GRIP/ORANGE	29	27
GRIP/ORANGE/10.5	17	13
GRIP/THROTTLE	7	7
GROMMET/10X40X03	55	29
GROMMET/13X17X5	49	19
GROMMET/15	49	20
GUIDE/CHANGE	21	19
GUIDE/PTO/MID	23	40
GUIDE/PTO/MID	62	39
HANDLE	46	4
HANDLE/ADJUST	44	21
HARNESS,OIL PRESSURE	56	17
HARNESS/EARTH	56	7
HARNESS/LAMP	53	11
HARNESS/MAIN/E4 ASSY	56	1
HARNESS/SOCKET ASSY	55	28
HEAD/CYLINDER	39	11
HITCH/FRONT COMP	33	1
HITCH/FRONT SET	65	1
HITCHI/DRAWBARSET	68	1
HOLDER	7	5
HOLDER,PINION SHAFT	24	7
HOLDER/15	43	27
HOLDER/COVER	46	37
HOLDER/HOOD	46	21
HOLDER/JE/9-9	1	11
HOLDER/JE/9-9	56	22
HOLDER/ROD	46	20
HOLDER/SHAFT ASSY	29	36
HOOD COMP	46	1
HOOD/LAMP	47	8
HOOD/LH	52	11
HOOD/RH	52	12
HOOD/UPPER	46	24
HOOK	9	6
HOOK,SPRING	39	23
HOOK,TOP LINK	44	36
HORN ASSY	55	1
HOSE	1	4
HOSE/03X07X800	46	26
HOSE/08X13X110	4	17
HOSE/08X13X300	4	15
HOSE/170	1	14
HOSE/290	1	15
HOSE/650	4	19
HOSE/70	43	5
HOSE/CLEANER/OUTLET	3	9
HOSE/RADIATOR/INLET	1	7
HOSE/RADIATOR/OUTLET	1	10
HOUSING ASSY	54	9
HOUSING/AXLE	36	1
HOUSING/AXLE/LH	25	1
HOUSING/AXLE/RH	25	2
HOUSING/CLUTCH COMP	8	1
HUB/SPACER COMP	44	5
INSULATOR	1	5
INSULATOR	1	22
INSULATOR	1	28
INSULATOR	5	12
INSULATOR	27	2
INSULATOR	29	52
INSULATOR	45	6
INSULATOR	46	2

Alpabetical Index

1738-097-100-00

Description	Fig.	Key
INSULATOR	46	36
INSULATOR	47	9
INSULATOR	48	14
INSULATOR	48	16
INSULATOR	48	17
INSULATOR	52	6
INSULATOR	57	10
INSULATOR	68	6
INSULATOR	69	11
INSULATOR/120	16	9
INSULATOR/120	42	16
INSULATOR/30X30X200	32	3
INSULATOR/36	5	10
INSULATOR/380	47	3
INSULATOR/550	1	23
INSULATOR/75	5	11
INSULATOR/LH	46	30
INSULATOR/RH	46	32
KEY	55	5
KIT/JOINT	34	2
KNOB	55	12
KNOB	55	15
LABEL,CONTROL	59	3
LABEL/4WD	59	7
LABEL/BATTERY	60	11
LABEL/CAUTION/BATTER	60	3
LABEL/CE	58	7
LABEL/COLUMN/LH	59	10
LABEL/COLUMN/RH	59	11
LABEL/CONTROL/ADJUST	59	8
LABEL/CONTROL/MAIN	59	1
LABEL/CONTROL/PARKIN	59	6
LABEL/CONTROL/PTO	59	4
LABEL/CONTROL/SUB	59	2
LABEL/DIFF	59	5
LABEL/DRAWBAR	45	7
LABEL/DRAWBAR	68	7
LABEL/DRIVE	60	1
LABEL/ETHER	60	6
LABEL/FUEL	60	12
LABEL/FUSE/E4	56	10
LABEL/PTO	60	9
LABEL/PTO/MID	58	6
LABEL/PTO/MID	59	12
LABEL/PTO/MID	62	46
LABEL/RADIATOR	60	7
LABEL/ROPS	60	13
LABEL/SPEED	60	14
LABEL/SWITCH/MAIN	59	9
LABEL/TRAILER	60	8
LABEL/W/FAN	60	2
LABEL/W/STARTER	60	10
LABEL/WARNING/BELT	60	4
LABEL/WARNING/HOT	60	5
LAMP/COMBINATIO SET	53	3
LAMP/HEAD ASSY	53	1
LAMP/NUMBERPLAT SET	53	9
LEVER	4	2
LEVER	55	11
LEVER COMP	7	6
LEVER/4WD COMP	17	12
LEVER/MAIN COMP	15	4
LEVER/PARKING ASSY	29	23
LEVER/POSITION	42	13
LEVER/PTO COMP	21	12
LEVER/PTO/MID COMP	23	30
LEVER/PTO/MID COMP	62	29
LEVER/SUB	16	6
LINING/11X30X02	42	6
LINING/11X40X03	7	8
LINK BRACKET	44	37
LINK SHIFT ARM	41	22
LINK,CRANK	41	12
LINK,TOP LH COMP	44	30
LINK/LOWER COMP	44	1
LINK/SPOOL COMP	41	11
LINK/SUPPORT COMP	41	18
LINK/TOP/RH COMP	44	32
LINKPIN	33	5
LINKPIN	44	3
LINKPIN	44	35
LINKPIN	45	5
LINKPIN	57	8
LINKPIN	65	5
LINKPIN	68	5
LINKPIN	69	9
LOCKPLATE	29	8
MAT/FLOOR/LH	52	7
MAT/FLOOR/RH	52	8
METAL,DIFF-CASE LH	24	14
METAL,DIFF-CASE RH	24	15
METAL/BRAKE	28	11
METAL/INPUT	10	24
METAL/PIVOT/REA ASSY	36	5
METAL/PTO	10	30
METAL/SHIFT	15	1
METER ASSY	54	2
MIRROR ASSY	52	26
MUFFLER COMP	2	1
NEEDLE	71	5
NET/GURILLE	47	5
NET/SIDE	46	33
NET/SIDE/LH	47	10
NET/SIDE/RH	47	11
NET/WIRE COMP	1	2
NIPPLE,GREASE	29	38
NIPPLE,GREASE	31	21
NIPPLE,GREASE	31	22
NIPPLE,GREASE	38	2
NIPPLE,GREASE/PT1/8	8	3
NIPPLE,GREASE/PT1/8	9	4
NIPPLE,GREASE/PT1/8	29	7
NUT	7	11
NUT	9	3
NUT	9	11
NUT	9	19
NUT	10	5
NUT	10	11
NUT	10	15
NUT	15	6
NUT	16	5
NUT	24	30
NUT	29	11
NUT	29	22
NUT	29	32
NUT	29	53
NUT	31	3
NUT	39	9
NUT	42	9
NUT	43	21
NUT	46	9
NUT	46	41
NUT	49	16
NUT	55	21
NUT	55	23

Alpabetical Index

Description	Fig.	Key	Description	Fig.	Key	Description	Fig.	Key
NUT,LOCK/16	44	23	O-RING	15	11	PACKING/RUBBER	5	6
NUT,RING	4	7	O-RING G60	39	13	PACKING/RUBBER	50	4
NUT,SPEED/P6	46	35	O-RING HS90 G50	43	14	PAD/120	5	3
NUT,SPEED/P6	47	7	O-RING P6 HS90	43	16	PANEL/INSTRUMEN ASSY	54	1
NUT,SPEED/P6	47	13	O-RING P6 HS90	71	8	PEDAL/BRAKE/LH SET	29	1
NUT,SPEED/P6	48	15	O-RING/G115	28	12	PEDAL/BRAKE/RH COMP	29	5
NUT,TOP LINK LOCK	44	33	O-RING/G70	36	7	PEDAL/CLUTCH COMP	9	1
NUT/M 6	6	7	O-RING/G90	37	4	PIN	10	29
NUT/M 6	23	35	O-RING/P 7	39	21	PIN	10	31
NUT/M 6	62	34	O-RING/P 7	41	20	PIN	15	3
NUT/M 8	40	9	O-RING/P 9	57	9	PIN	23	4
NUT/M 8	44	7	O-RING/P 9	69	10	PIN	24	8
NUT/M08	43	20	O-RING/P10A	4	4	PIN	24	9
NUT/M10	31	11	O-RING/P10A	18	5	PIN	25	11
NUT/M10	37	38	O-RING/P10A	18	13	PIN	37	6
NUT/M10	72	14	O-RING/P10A	24	28	PIN	37	31
NUT/M10 7T P=1.25	8	6	O-RING/P10A	41	23	PIN	37	35
NUT/M10 7T P=1.25	31	6	O-RING/P12	39	12	PIN	39	10
NUT/M10X1.25	30	3	O-RING/P12	39	18	PIN	54	5
NUT/M10X1.25	31	25	O-RING/P12	71	7	PIN	62	5
NUT/M10X1.25	38	5	O-RING/P14	17	14	PIN SPLIT W 6.0X16	13	6
NUT/M12	10	19	O-RING/P14	21	7	PIN,BACK GEAR	13	5
NUT/M12	22	3	O-RING/P14	23	24	PIN,HAIR	44	26
NUT/M12	27	8	O-RING/P14	62	24	PIN,HAIR	50	10
NUT/M12	29	46	O-RING/P16	25	13	PIN,HAIR	50	11
NUT/M12	44	11	O-RING/P18	28	10	PIN,LIFT ARM	40	7
NUT/M12	70	4	O-RING/P18	43	32	PIN,ROD COMP	41	5
NUT/M12/LH	29	47	O-RING/P18	57	7	PIN,SPLIT/1.6X15	52	21
NUT/M14	53	14	O-RING/P18	69	8	PIN,SPLIT/2 X15	23	43
NUT/M14	57	14	O-RING/P20	43	8	PIN,SPLIT/2 X15	41	13
NUT/M14	69	15	O-RING/P20	43	25	PIN,SPLIT/2 X15	41	16
NUT/M16	57	3	O-RING/P22	43	15	PIN,SPLIT/2 X15	62	42
NUT/M16	69	4	O-RING/P44	4	8	PIN,SPLIT/2 X20	7	4
NUT/M22	55	10	O-RING/P55	41	2	PIN,SPLIT/2 X20	7	15
NUT/M6	48	12	ORNAMENT/3160	58	4	PIN,SPLIT/2 X20	9	8
NUT/M6	55	3	ORNAMENT/I	58	3	PIN,SPLIT/2 X20	17	5
NUT/M8	21	16	ORNAMENT/I/STEERING	58	5	PIN,SPLIT/2 X20	27	5
NUT/M8	29	21	ORNAMENT/ISEKI/LH	58	1	PIN,SPLIT/2 X20	29	15
NUT/M8	29	33	ORNAMENT/ISEKI/RH	58	2	PIN,SPLIT/2 X20	29	19
NUT/RING	55	6	PACKING	1	19	PIN,SPLIT/2 X20	29	35
NUT/SPRING	48	3	PACKING	4	11	PIN,SPLIT/2 X20	30	5
NUT/WASHER	5	15	PACKING	36	3	PIN,SPLIT/2 X20	46	19
NUT/WASHER	33	8	PACKING,OIL PUMP	43	19	PIN,SPLIT/2.5X20	29	50
NUT/WASHER	53	8	PACKING,SIDE COVER	72	7	PIN,SPLIT/2.5X20	31	26
NUT/WASHER	65	8	PACKING,TOP COVER	72	3	PIN,SPLIT/2.5X20	38	6

Alpabetical Index

1738-097-100-00

Description	Fig.	Key
PIN,SPLIT/2.5X20	44	14
PIN,SPLIT/2.5X25	7	12
PIN,SPLIT/2.5X25	21	4
PIN,SPLIT/2.5X25	31	15
PIN,SPLIT/3 X15	9	14
PIN,SPLIT/3 X20	8	14
PIN,SPLIT/4 X25	44	28
PIN,SPRING 3X32	39	22
PIN,SPRING/5 X20 W	17	9
PIN,SPRING/5 X20 W	42	12
PIN,SPRING/5 X25 W	21	11
PIN,SPRING/5 X25 W	35	12
PIN,SPRING/5 X32 W	17	16
PIN,SPRING/5 X32 W	44	22
PIN,SPRING/6 X25 W	23	45
PIN,SPRING/6 X25 W	62	44
PIN,SPRING/6 X28 W	8	24
PIN,SPRING/6 X40 W	23	10
PIN,SPRING/6 X40 W	62	10
PIN,TAPER/8X50	29	2
PIN,TAPER/8X50	29	42
PIN,TOP LINK	44	34
PIN,YOKE A	29	13
PIN,YOKE A	29	17
PIN/08X19	29	34
PIN/10X154	50	8
PIN/10X25	29	48
PIN/10X32	44	13
PIN/12X75	8	13
PIN/12X75	35	11
PIN/15X42 COMP	31	13
PIN/16X44	44	27
PIN/16X63	44	25
PIN/20X51	23	6
PIN/20X51	62	6
PIN/20X58	57	6
PIN/20X58	69	7
PIN/22X404	44	4
PIN/30X120 COMP	33	4
PIN/30X120 COMP	65	4
PIN/30X162 COMP	45	4
PIN/30X162 COMP	68	4
PIN/5X17	41	15
PIN/ADJUST	39	20
PIN/SLITTED	24	26
PIN/SUPPORT COMP	41	19
PINION/BEVEL SET	12	1
PINION/BEVEL SET	35	1
PINION/BEVEL/11	35	9
PINION/BEVEL/12	24	3
PIPE/123	26	3
PIPE/63	19	7
PIPE/CLEANER	3	7
PIPE/DELIVERY/FRONT	43	23
PIPE/DELIVERY/REAR	43	29
PIPE/SUC/FRONT COMP	43	7
PIPE/SUCTION/REAR	43	2
PISTON	41	1
PLATE	42	5
PLATE/BATTERY	6	6
PLATE/BUMPER	70	1
PLATE/FRICTION	28	3
PLATE/FRICTION	28	7
PLATE/GUIDE	15	17
PLATE/HITCH COMP	45	1
PLATE/I/30X50	23	26
PLATE/I/30X50	62	47
PLATE/I/38X60	46	22
PLATE/L/28X28	29	58
PLATE/L/38X114	57	15
PLATE/L/38X114	69	16
PLATE/LOCK COMP	46	14
PLATE/PARKING/A	29	43
PLATE/PARKING/B	29	44
PLATE/PRESSURE/LH	28	1
PLATE/PRESSURE/RH	28	5
PLATE/SEPARATER	28	2
PLATE/SEPARATER	28	6
PLATE/STOP COMP	52	18
PLUG	1	18
PLUG	71	4
PLUG,DRAIN	10	22
PLUG,DRAIN	25	12
PLUG,OIL/PT1/4	72	18
PLUG/7P	55	27
PLUG/SCREW	32	4
PLUG/SCREW/SEAL	8	4
PLUG/SCREW/SEAL	23	5
PLUG/SCREW/SEAL	37	20
PLUG/SCREW/SEAL	43	24
PLUG/SCREW/SEAL	62	26
PLUG/SCREW/SEAL	71	6
PROTECTOR/040	46	48
PTO/MID SET	62	1
PUMP GEAR ASSY	43	10
RABEL/FUSE/SLOWBLOW	56	8
RADIATOR ASSY	1	1
REFLECTOR ASSY	49	11
RIM/WHEEL/600IX10	67	2
RIM/WHEEL/600IX10	67	7
RING,BACKUP	41	3
RING,SNAP/14 C	18	14
RING,SNAP/20C	11	9
RING,SNAP/20C	19	15
RING,SNAP/20C	20	7
RING,SNAP/22 C	13	4
RING,SNAP/22 C	29	3
RING,SNAP/22 C	29	56
RING,SNAP/25	12	4
RING,SNAP/25 C	11	6
RING,SNAP/25 C	19	9
RING,SNAP/25 C	23	12
RING,SNAP/25 C	23	39
RING,SNAP/25 C	31	19
RING,SNAP/25 C	35	5
RING,SNAP/25 C	37	29
RING,SNAP/25 C	62	15
RING,SNAP/25 C	62	38
RING,SNAP/28 C	15	10
RING,SNAP/30 C	26	7
RING,SNAP/35 C	37	15
RING,SNAP/35 C	40	6
RING,SNAP/47 C	37	3
RING,SNAP/47 C	37	19
RING,SNAP/52 C	12	13
RING,SNAP/52 C	19	3
RING,SNAP/52 C	23	17
RING,SNAP/52 C	35	7
RING,SNAP/52 C	62	18
RING/E	54	3
RING/O	16	2
RING/O	36	4
RING/O	43	3
RING/SNAP	26	8
RING/SNAP	34	3

Alpabetical Index

Description	Fig.	Key
RING/SNAP	35	15
RING/SNAP	35	16
RING/SNAP	37	9
RING/SNAP	37	16
RING/SNAP	40	5
RIVET	52	10
ROD	29	24
ROD	41	4
ROD,CLUTCH (A)	9	9
ROD/115 COMP	29	29
ROD/193	27	3
ROD/355 COMP	29	20
ROD/70 COMP	29	30
ROD/CLUTCH/B	9	12
ROD/DRAG ASSY	31	20
ROD/HOOD	46	17
ROD/LIFT/LH COMP	44	17
ROD/LIFT/RH COMP	44	18
ROD/M12X66	29	45
ROD/STEERING COMP	31	12
ROD/TIE/589 ASSY	38	1
ROD/TIE/MID	23	41
ROD/TIE/MID	62	40
RUBBER,CUSHION	29	51
RUBBER,CUSHION	46	12
RUBBER,CUSHION	50	12
S.W	43	18
SCREW	44	20
SCREW	54	17
SCREW	54	20
SCREW,SEMS	49	15
SCREW/4X16	54	18
SCREW/BALL ASSY	72	9
SCREW/M6X16	46	25
SCREW/SP	48	8
SCREW/SP	48	11
SCREW/SP	49	10
SCREW/TAPPING	54	11
SEAL,OIL	37	12
SEAL,OIL	43	13
SEAL,OIL/21	35	6
SEAL,OIL/MHSA19368	72	13
SEAL,OIL/MHSA26388	72	17
SEAL,OIL/QLF488011.5	26	4
SEAL,OIL/TC20357	8	2
SEAL,OIL/TC20357	11	2
SEAL,OIL/TC20357	14	5
SEAL,OIL/TC35528	23	18
SEAL,OIL/TC35528	62	20
SEAL,OIL/TC35558	20	8
SEAL,OIL/VC35506	40	2
SEAL/QLNY35571116	37	26
SHACKLE	44	12
SHAFT	37	21
SHAFT	37	42
SHAFT	37	43
SHAFT,CROSS	72	8
SHAFT,DIFF. PINION	24	2
SHAFT/4WD ASSY	34	1
SHAFT/BRAKE SET	29	41
SHAFT/CHANGE	11	7
SHAFT/DRIVE/PTO	19	1
SHAFT/FRONT COMP	14	2
SHAFT/INPUT	8	22
SHAFT/LIFT	40	1
SHAFT/PTO	20	1
SHAFT/PTO/MID	23	11
SHAFT/PTO/MID	62	11
SHAFT/WHEEL	26	1
SHAFT/WHEEL	37	24
SHIFTER/PTO	21	1
SHIM,DIFF-CASE A	24	16
SHIM,DIFF-CASE B	24	17
SHIM,TOP COVER	72	4
SHIM/T=0.7	15	21
SHROUD COMP	1	21
SLEEVE	8	15
SLEEVE	20	2
SLEEVE	23	15
SLEEVE	62	19
SOCKET	54	13
SOCKET	54	15
SPRING	29	25
SPRING	44	2
SPRING	71	2
SPRING	71	3
SPRING,PRESS/22	7	9
SPRING,PRESS/40	24	27
SPRING,SHIFTER	17	3
SPRING,SHIFTER	21	2
SPRING,SHIFTER	23	22
SPRING,SHIFTER	62	14
SPRING,TENSION/121	27	6
SPRING,TENSION/31	41	10
SPRING,TENSION/53	7	1
SPRING,TENSION/53	42	10
SPRING,VALVE	4	3
SPRING/HC023	18	7
SPRING/HC023	18	17
SPRING/HC024	21	14
SPRING/HC024	23	33
SPRING/HC024	62	32
SPRING/HC060	15	14
SPRING/HC094	9	5
SPRING/HC50	8	16
SPRING/HE089	46	10
SPRING/HE106	29	4
SPRING/HE106	29	6
SPRING/HE110	29	57
SPRING/HOOD	46	11
SPRING/WASHER	42	7
STAY COMP	52	3
STAY,SHIFTER	17	8
STAY,SHIFTER	24	24
STAY/INSULATOR	48	18
STAY/PLATE	44	15
STAY/PTO/PARKIN COMP	21	17
STAY/SHIFT/1ST	18	1
STAY/SHIFT/2ND	18	9
STAY/SHIFT/PTO	21	5
STEERING/2/380 ASSY	30	1
STEP/LH COMP	52	1
STEP/RH COMP	52	2
STOPPER/CRANK COMP	40	10
SUBCONCOVER	39	17
SWITCH ASSY	55	9
SWITCH,STOP	55	20
SWITCH/HAZARD ASSY	55	8
SWITCH/MAIN ASSY	55	4
SWITCH/PUSH SET	55	22
SWITCH/ROTARY/2 ASSY	55	14
TANK/FUEL COMP	5	1
TAPE/10X20	49	13
TIRE	64	3
TIRE	64	8

Alpabetical Index

1738-097-100-00

Description	Fig.	Key	Description	Fig.	Key	Description	Fig.	Key
TIRE	66	3	WASHER	47	15	WASHER,SP/M10	2	4
TIRE	66	8	WASHER	54	6	WASHER,SP/M10	6	14
TIRE,F.TURF212-80-15	63	3	WASHER / M16	44	29	WASHER,SP/M10	8	8
TIRE,F.TURF212-80-15	63	8	WASHER / M16	57	5	WASHER,SP/M10	10	6
TIRE/8-16-4/LH ASSY	64	1	WASHER / M16	69	6	WASHER,SP/M10	10	12
TIRE/8-16-4/RH ASSY	64	6	WASHER / M6	6	8	WASHER,SP/M10	10	16
TIRE/FRONT/LH ASSY	66	1	WASHER / M6	7	3	WASHER,SP/M10	23	3
TIRE/FRONT/RH ASSY	66	6	WASHER / M6	7	14	WASHER,SP/M10	24	31
TIRE/TURF	67	3	WASHER / M6	9	7	WASHER,SP/M10	25	9
TIRE/TURF	67	8	WASHER / M6	29	40	WASHER,SP/M10	31	10
TIRE/TURF/LH ASSY	63	1	WASHER / M6	41	14	WASHER,SP/M10	31	24
TIRE/TURF/LH ASSY	67	1	WASHER / M6	46	18	WASHER,SP/M10	32	6
TIRE/TURF/RH ASSY	63	6	WASHER / M6	48	5	WASHER,SP/M10	37	39
TIRE/TURF/RH ASSY	67	6	WASHER /M12	25	7	WASHER,SP/M10	38	4
TOOL/FUSE	56	9	WASHER /M12	27	9	WASHER,SP/M10	39	8
TRIM/130	1	27	WASHER /M12	44	40	WASHER,SP/M10	56	14
TRIM/265	47	2	WASHER /M12	51	5	WASHER,SP/M10	62	4
TRIM/290	52	15	WASHER,PL/M 4	49	12	WASHER,SP/M12	8	10
TRIM/70	47	4	WASHER,PL/M 8	4	14	WASHER,SP/M12	10	20
TRIM/715	52	22	WASHER,PL/M 8	9	13	WASHER,SP/M12	22	2
TUBE	63	4	WASHER,PL/M 8	10	28	WASHER,SP/M12	25	6
TUBE	63	9	WASHER,PL/M 8	17	7	WASHER,SP/M12	26	10
TUBE	67	4	WASHER,PL/M 8	18	4	WASHER,SP/M12	33	3
TUBE	67	9	WASHER,PL/M 8	18	12	WASHER,SP/M12	36	9
TUBE/ 8-16	64	4	WASHER,PL/M 8	23	42	WASHER,SP/M12	37	41
TUBE/ 8-16	64	9	WASHER,PL/M 8	27	4	WASHER,SP/M12	39	16
TUBE/10X12X50	23	32	WASHER,PL/M 8	29	14	WASHER,SP/M12	44	39
TUBE/10X12X50	62	31	WASHER,PL/M 8	29	18	WASHER,SP/M12	45	3
TUBE/SHIFT/MAIN COMP	15	8	WASHER,PL/M 8	34	13	WASHER,SP/M12	51	2
TUBE/TIRE	66	4	WASHER,PL/M 8	46	8	WASHER,SP/M12	65	3
TUBE/TIRE	66	9	WASHER,PL/M 8	46	40	WASHER,SP/M12	68	3
TURNBUCKLE	9	10	WASHER,PL/M 8	49	18	WASHER,SP/M12	70	3
TURNBUCKLE 12 COMP	44	9	WASHER,PL/M 8	62	41	WASHER,SP/M14	53	13
TURNBUCKLE/M8	29	31	WASHER,PL/M14	31	14	WASHER,SP/M14	57	13
TURNBUCLE COMP	44	31	WASHER,SEAL/16	10	23	WASHER,SP/M14	69	14
U-NUT	29	9	WASHER,SP/M 6	29	39	WASHER,SP/M16	57	4
VALVE	3	4	WASHER,SP/M 8	3	14	WASHER,SP/M16	69	5
VALVE SET	71	1	WASHER,SP/M 8	4	13	WASHER,SP/M20	31	4
VALVE CONTROL ASSY	41	8	WASHER,SP/M 8	10	27	WASHER/12X25X02	46	5
VALVE/RELIEF ASSY	71	9	WASHER,SP/M 8	18	3	WASHER/15X24X2	17	15
VIS	4	5	WASHER,SP/M 8	18	11	WASHER/15X24X2	21	8
WASHER	7	10	WASHER,SP/M 8	24	11	WASHER/20X28X2	20	6
WASHER	41	17	WASHER,SP/M 8	34	8	WASHER/20X32X02	19	14
WASHER	46	6	WASHER,SP/M 8	42	3	WASHER/24X9X3.2	48	7
WASHER	47	14	WASHER,SP/M 8	43	22	WASHER/24X9X3.2	49	3

Alpabetical Index

Description	Fig.	Key	Description	Fig.Key	Description	Fig.Key
WASHER/24X9X3.2	49	7				
WASHER/25X34X02	23	38				
WASHER/25X34X02	62	37				
WASHER/26X35X02	31	18				
WASHER/6X14X3	46	34				
WASHER/6X14X3	47	6				
WASHER/6X14X3	47	12				
WASHER/6X24X2	47	20				
WASHER/6X24X2	52	19				
WASHER/M10	6	13				
WASHER/M10	10	7				
WASHER/M10	10	13				
WASHER/M10	10	17				
WASHER/M10	25	10				
WASHER/M10	29	49				
WASHER/M10	30	4				
WASHER/M10	39	7				
WASHER/M10	41	7				
WASHER/M10	42	8				
WASHER/M10	50	9				
WASHER/M10	56	13				
WHEEL/12X3.00D COMP	66	2				
WHEEL/12X3.00D COMP	66	7				
WHEEL/15X7JA COMP	63	2				
WHEEL/15X7JA COMP	63	7				
WHEEL/16X5JA COMP	64	2				
WHEEL/16X5JA COMP	64	7				
YOKE COMP	29	16				
YOKE,LH	29	12				
YOKE/CLAMP	34	4				
YOKE/SHAFT	34	5				
YOKE/SLEEVE	34	6				

Yvan Béal - 21, av. de l'Agriculture - B.P. 16
Z.I. du Brézet - 63014 Clermont-Ferrand Cedex 2
Tél : 04 73 91 93 51 - Télécopie : 04 73 90 23 11
www.yvanbeal.fr - E-mail : info@yvanbeal.fr
R.C.S. Clermont-Fd B 304 973 886 - S.A.S. au capital de 612 000 €